EMB Manufacturing Inc.
4144 Boomer Line · St. Clements, On · N0B 2M0 · Canada
Ph: (519) 699-9283 · Fax: (519) 699-4146
www.wallensteinequipment.com

CR100 Trailer

Chipper Parts Manual

Starting with S/N 2E9US1110FS010030 and On

MODELS CR100,
CR100H, CR100HW

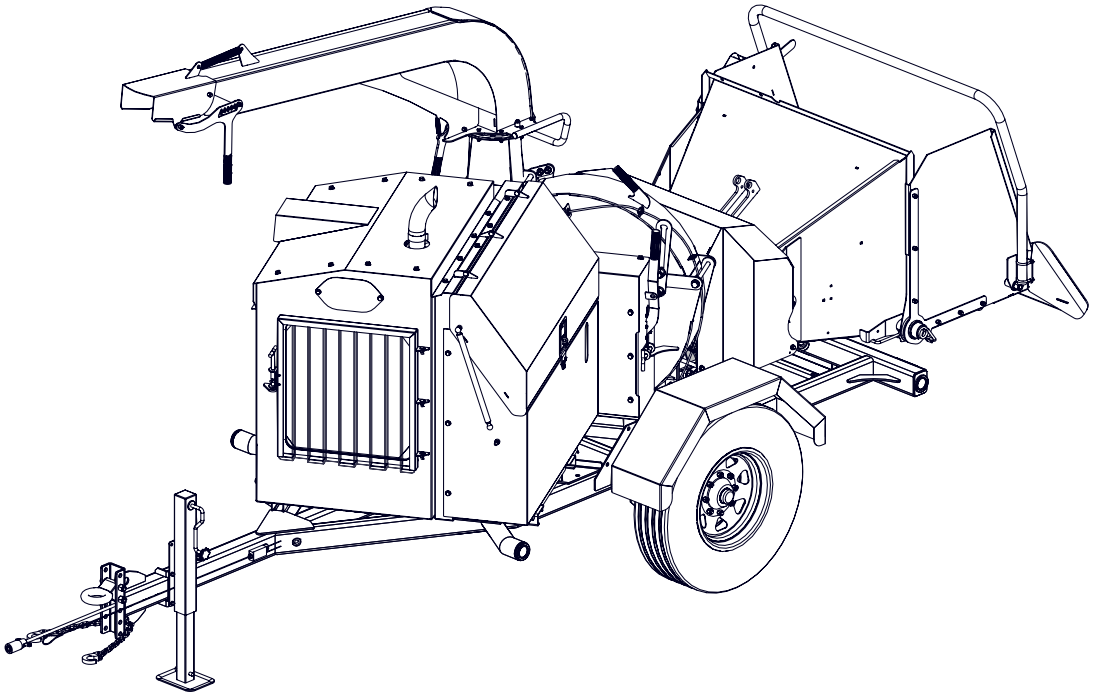

Refer to the operators manual for safe operation and maintenance

1060T100 CR100 RevF1 Parts Manual. 020816
Rev # 190417

Table of Contents

Bolt Torque 4
Hydraulic Fitting Torque 5
Wheel Lug Torque 5
Frame Detail - Tongue & Jack 6
Frame Detail - Front 7
Frame Detail - Rear 8
Frame & Fender Assembly 9
Hub Assembly 10
Brake Assembly 10
Engine Carriage 11
Engine 12
Engine Parts 12
Engine Compartment Door 13
Engine Compartment Shroud 13
Radiator Shroud & Screen Door 14
Tank Compartment Shroud 14
Tank Compartment Tool Tray Detail 15
Control Panel 15
Battery Fuel & Hydraulic Tanks 16
Battery Fuel & Hydraulic Tanks Parts List 17
Tank Compartment Lid 18
Discharge Chute 19
Rotor Housing Rear 20
Rotor Housing Front 20
Rotor Interlock Latch 21
Rotor Interlock Clutch 21
Rotor Assembly 22
Pulley Shroud 23
Hopper Top / Back View 24
Bypass Valve Detail 24
Hopper Front/ Bottom View 25
Upper Roller 26
Lower Roller 27
Hopper Roller Shrouding 28
Feed Table 29
Feed Roller Control Detail 30
Winch 31
Winch Drum Detail 32
Winch Arm Ass'y 32
Fairlead Ass'y Detail 33
Roller Lift Hydraulic Cylinder 33
Cylinder Seal Installation 34
Roller Lift Hydraulic Cylinder Detail 34
Intellifeed Manifold Ass'y 35
Winch and Roller Lift Hydraulic Controls 35
Intellifeed Wiring Harness & 36
Lights and Brakes Wiring Harness 36
Intellifeed Wiring Diagram #Z62108 37
Hydraulic Hose Parts List 38
Hydraulic Schematic CR100 39
Hydraulic Schematic CR100H 40
Hydraulic Schematic CR100HW 41
Label Layout - List 42
Label Layout - Left Side 43
Label Layout - Right Side 44
Accessories 45

Foreword

EMB Mfg. has prepared this parts manual to assist customers in ordering quality OEM replacement parts.

Proper and regular service and replacing old, worn or broken parts with the correct OEM parts are essential to prolonging the life of your EMB product. Please refer to this manual before ordering any replacement parts.

All information contained in this parts manual is based on the latest product specification available at the time of printing this manual. If your product differs from the specifications contained within this manual contact EMB Mfg. for information.

EMB reserves the right to alter specifications on their products at any time.

Reproduction of this parts manual of any kind is prohibited without prior written permission from EMB Mfg.

For parts and information please contact your dealer. If your dealer is no longer available please go to our website: http://www.wallensteinequipment.com and click on ”FIND A DEALER NEAR YOU” for information on a local dealer.

Bolt Torque

CHECKING BOLT TORQUE

The tables shown below give correct torque values for various bolts and capscrews. Tighten all bolts to the torques specified in chart unless otherwise noted. Check tightness of bolts periodically, using bolt torque chart as a guide. Replace hardware with the same strength bolt.

ENGLISH TORQUE SPECIFICATIONS						
Bolt Diamter "A"	Bolt Torque*					
	SAE 2		SAE 5		SAE 8	
	(N.m)	(lb-ft)	(N.m)	(lb-ft)	(N.m)	(lb-ft)
1/4"	8	6	12	9	17	12
5/16"	13	10	25	19	36	27
3/8"	27	20	45	33	63	45
7/16"	41	30	72	53	100	75
1/2"	61	45	110	80	155	115
9/16"	95	60	155	115	220	165
5/8"	128	95	215	160	305	220
3/4"	225	165	390	290	540	400
7/8"	230	170	570	420	880	650
1"	345	225	850	630	1320	970

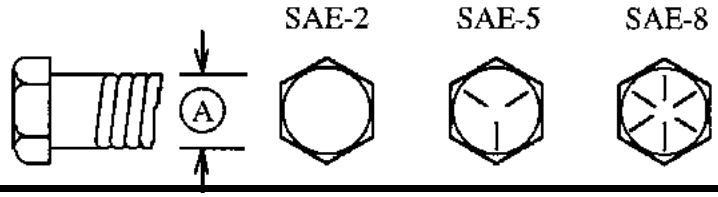

Torque figures indicated above are valid for non-greased or non-oiled threads and heads unless otherwise specified. Therefore, do not grease or oil bolts or capscrews unless otherwise specified in this manual. When using locking elements, increase torque values by 5%.

* Torque value for bolts and capscrews are identified by their head markings.

METRIC TORQUE SPECIFICATIONS				
Bolt Diameter "A"	Bolt Torque*			
	8.8		10.9	
	(N.m)	(lb-ft)	(N.m)	(lb-ft)
M3	0.5	0.4	1.8	1.3
M4	3	2.2	4.5	3.3
M5	6	4	9	7
M6	10	7	15	11
M8	25	18	35	26
M10	50	37	70	52
M12	90	66	125	92
M14	140	103	200	148
M16	225	166	310	229
M20	435	321	610	450
M24	750	553	1050	774
M30	1495	1103	2100	1550
M36	2600	1917	3675	2710

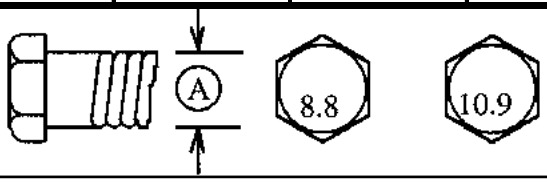

Hydraulic Fitting Torque

Tightening Flare Type Tube Fittings *

1. Check flare and flare seat for defects that might cause leakage.
2. Align tube with fitting before tightening.
3. Lubricate connection and hand tighten swivel nut until snug.
4. To prevent twisting the tube(s), use two wrenches. Place one wrench on the connector body and with the second tighten the swivel nut to the torque shown.

Tube Size OD (in.)	Nut Size Across Flats (in.)	Torque Value• (N.m)	Torque Value• (lb-ft)	Recommended Turns To Tighten (After Finger Tightening) (Flats)	Recommended Turns To Tighten (After Finger Tightening) (Turn)
3/16	7/16	8	6	1	1/6
1/4	9/16	12	9	1	1/6
5/16	5/8	16	12	1	1/6
3/8	**11/16**	**24**	**18**	**1**	**1/6**
1/2	7/8	46	34	1	1/6
5/8	1	62	46	1	1/6
3/4	1-1/4	102	75	3/4	1/8
7/8	1-3/8	122	90	3/4	1/8

The torque values shown are based on lubricated connections as in reassembly.

Wheel Lug Torque

It is extremely important safety procedure to apply and maintain proper wheel mounting torque on your trailer axle. Torque wrenches are the best method to assure the proper amount of torque is being applied to a fastener.

Wheel lugs should be torqued before first road use and after each wheel removal. Check and re torque after the first 16Km (10 miles), 40Km (25 miles), and again at 80Km (50 miles). Check periodically thereafter.

Note: Wheel lugs must be applied and maintained at the proper torque levels to prevent loose wheels, broken studs, and possible dangerous separation of wheels from your axle.

- Start all lugs by hand to prevent cross threading.
- Tighten lugs in sequence, per wheel lug torque sequence chart.
- The tightening of the fasteners should be done in stages. Following the recommended sequence, tighten fasteners per wheel torque requirements chart.

Wheel Torque Requirements

Wheel Size	Torque Unit	1st Stage	2nd Stage	3rd Stage
8"	ft-lbs	12 - 20	30 - 35	45 - 55
	Nm	16 - 26	39 - 45.5	58.5 - 71.5
12"	ft-lbs	20 - 25	35 - 40	50 - 60
	Nm	26 - 32.5	45.5 - 52	65 - 78
13"	ft-lbs	20 - 25	35 - 40	50 - 60
	Nm	26 - 32.5	45.5 - 52	65 - 78
14"	ft-lbs	20 - 25	50 - 60	90 - 120
	Nm	26 - 32.5	65 - 78	117 - 156
15"	ft-lbs	20 - 25	50 - 60	90 - 120
	Nm	26 - 32.5	65 - 78	117 - 156
16"	ft-lbs	20 - 25	50 - 60	90 - 120
	Nm	26 - 32.5	65 - 78	117 - 156

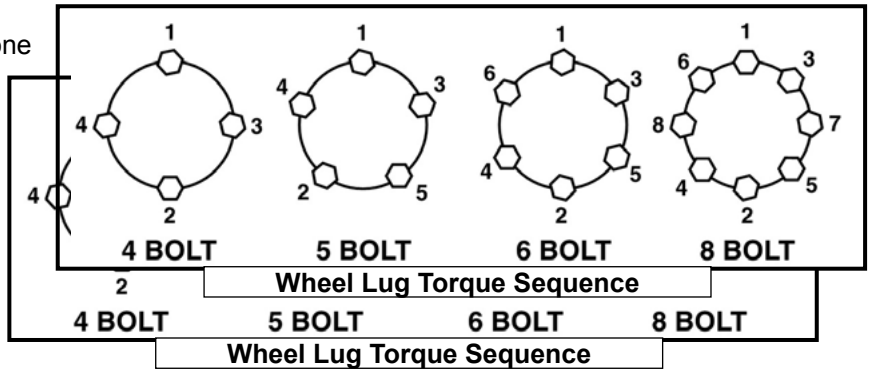

4 BOLT 5 BOLT 6 BOLT 8 BOLT
Wheel Lug Torque Sequence

Frame Detail - Tongue & Jack

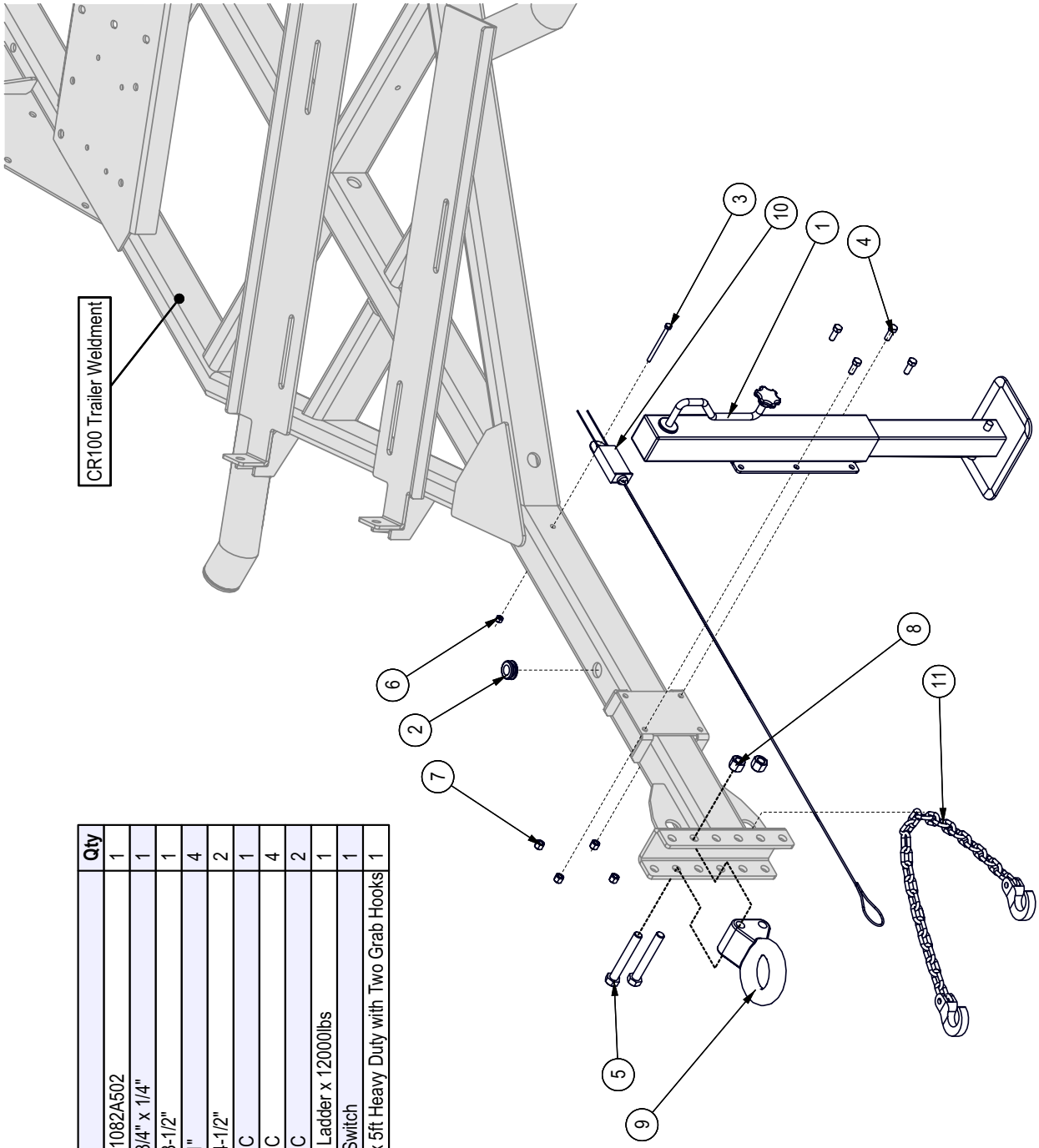

BOM ID	Part No.	Description	Qty
1	1082W503	Jack Weldment for 1082A502	1
2	Z62822	Rubber Grommet, 3/4" x 1/4"	1
3	Z71135	Hex Bolt, 1/4NC x 3-1/2"	1
4	Z71310	Hex Bolt, 3/8NC x 1"	4
5	Z71645	Hex Bolt, 5/8NC x 4-1/2"	2
6	Z72211	Hex Lock Nut, 1/4NC	1
7	Z72231	Hex Lock Nut, 3/8NC	4
8	Z72261	Hex Lock Nut, 5/8NC	2
9	Z91622	Pintle, 2-1/2" Eye x Ladder x 12000lbs	1
10	Z91713	Breakaway Safety Switch	1
11	Z92309	Safety Chain, 1/4" x 5ft Heavy Duty with Two Grab Hooks	1

Frame Detail - Front

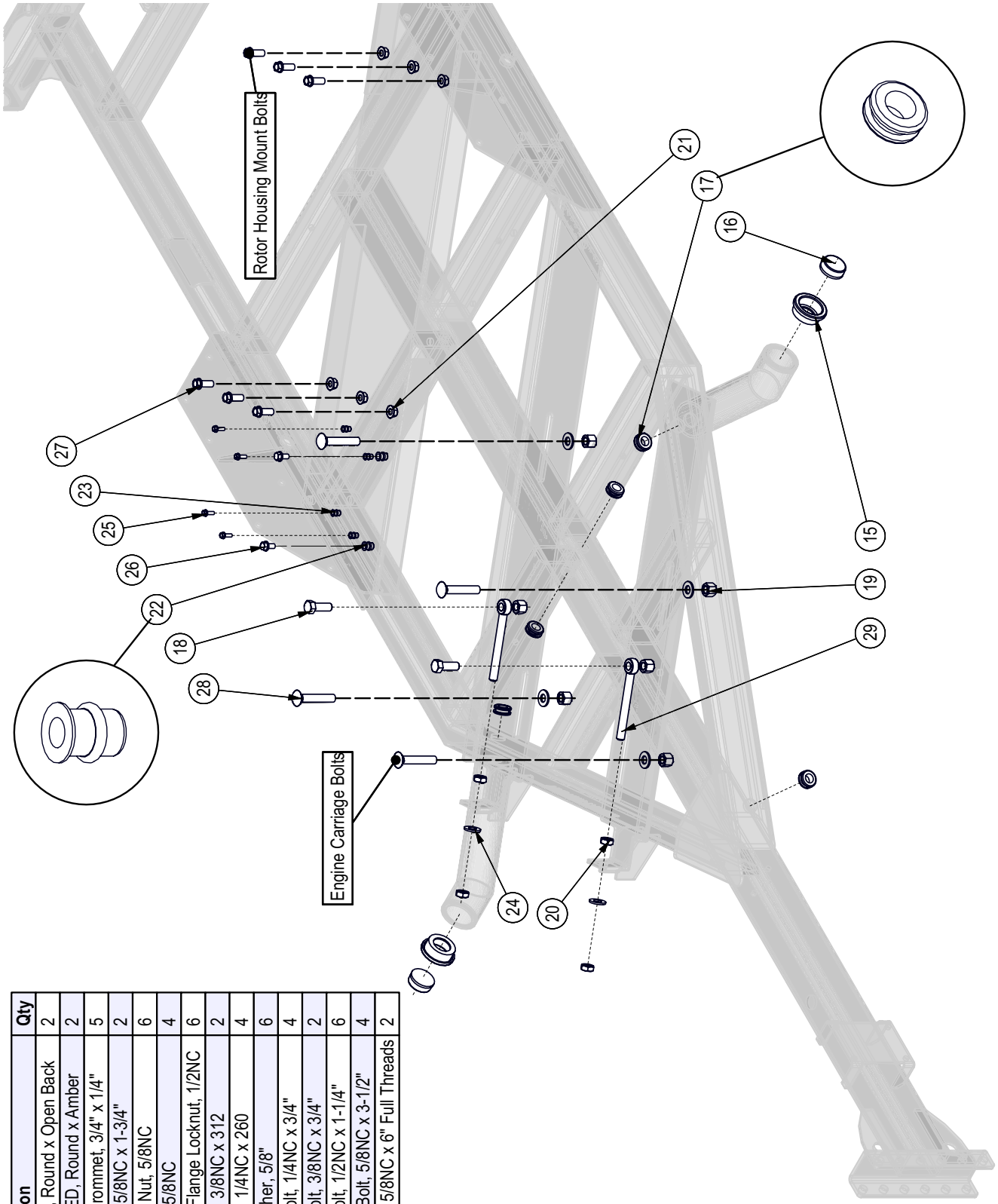

BOM ID	Part No.	Description	Qty
15	Z61202	Grommet, Round x Open Back	2
16	Z61211	Marker LED, Round x Amber	2
17	Z62822	Rubber Grommet, 3/4" x 1/4"	5
18	Z71617	Hex Bolt, 5/8NC x 1-3/4"	2
19	Z72261	Hex Lock Nut, 5/8NC	6
20	Z72361	Jam Nut, 5/8NC	4
21	Z72551	Serrated Flange Locknut, 1/2NC	6
22	Z72959	Rivet Nut, 3/8NC x 312	2
23	Z72962	Rivet Nut, 1/4NC x 260	4
24	Z73161	SAE Washer, 5/8"	6
25	Z76111	Flange Bolt, 1/4NC x 3/4"	4
26	Z76133	Flange Bolt, 3/8NC x 3/4"	2
27	Z76152	Flange Bolt, 1/2NC x 1-1/4"	6
28	Z76265	Carriage Bolt, 5/8NC x 3-1/2"	4
29	Z76561	Rod End, 5/8NC x 6" Full Threads	2

Frame Detail - Rear

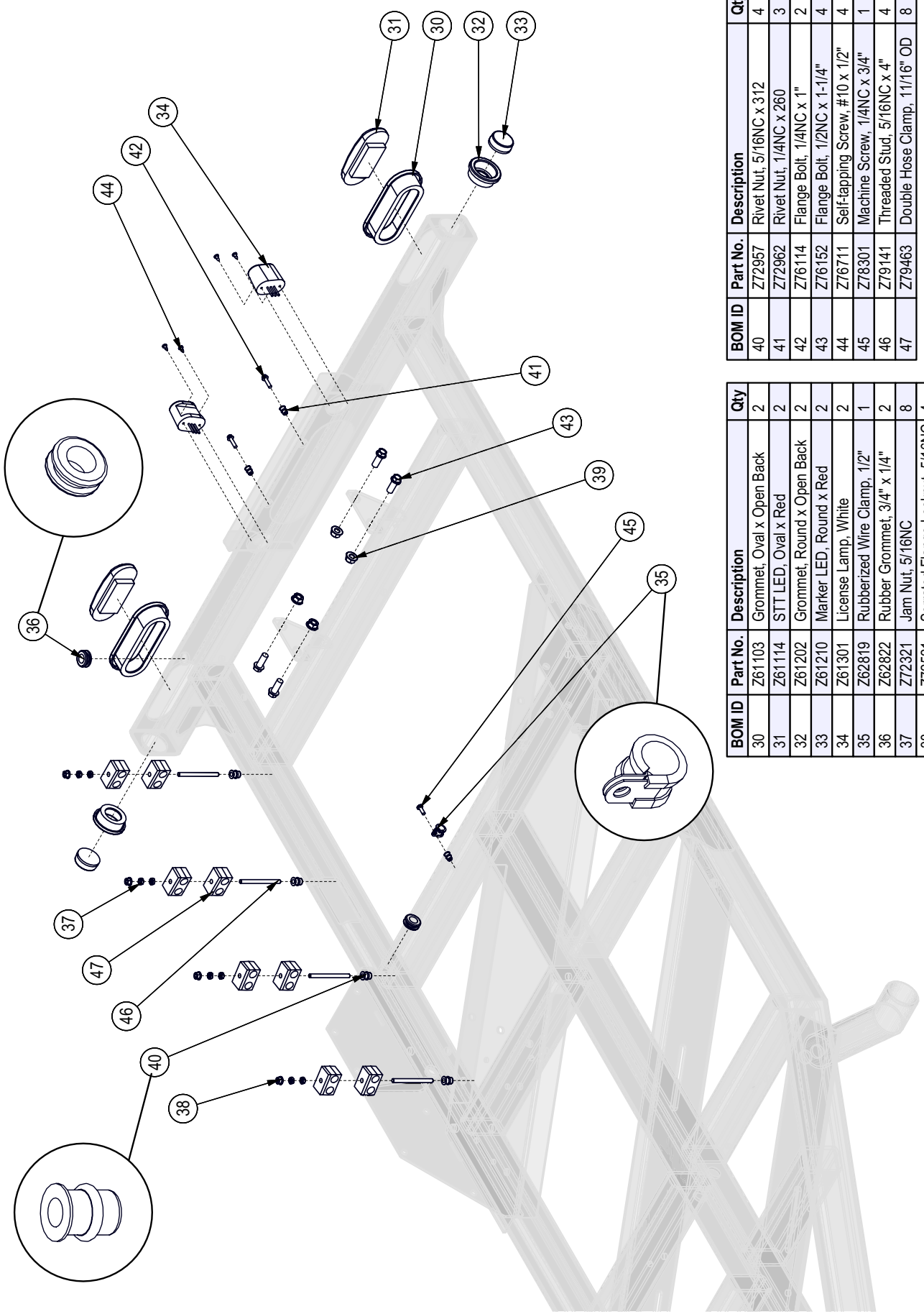

BOM ID	Part No.	Description	Qty
30	Z61103	Grommet, Oval x Open Back	2
31	Z61114	STT LED, Oval x Red	2
32	Z61202	Grommet, Round x Open Back	2
33	Z61210	Marker LED, Round x Red	2
34	Z61301	License Lamp, White	2
35	Z62819	Rubberized Wire Clamp, 1/2"	1
36	Z62822	Rubber Grommet, 3/4" x 1/4"	2
37	Z72321	Jam Nut, 5/16NC	8
38	Z72521	Serrated Flange Locknut, 5/16NC	4
39	Z72551	Serrated Flange Locknut, 1/2NC	4

BOM ID	Part No.	Description	Qty
40	Z72957	Rivet Nut, 5/16NC x 312	4
41	Z72962	Rivet Nut, 1/4NC x 260	3
42	Z76114	Flange Bolt, 1/4NC x 1"	2
43	Z76152	Flange Bolt, 1/2NC x 1-1/4"	4
44	Z76711	Self-tapping Screw, #10 x 1/2"	4
45	Z78301	Machine Screw, 1/4NC x 3/4"	1
46	Z79141	Threaded Stud, 5/16NC x 4"	4
47	Z79463	Double Hose Clamp, 11/16" OD	8

Frame & Fender Assembly

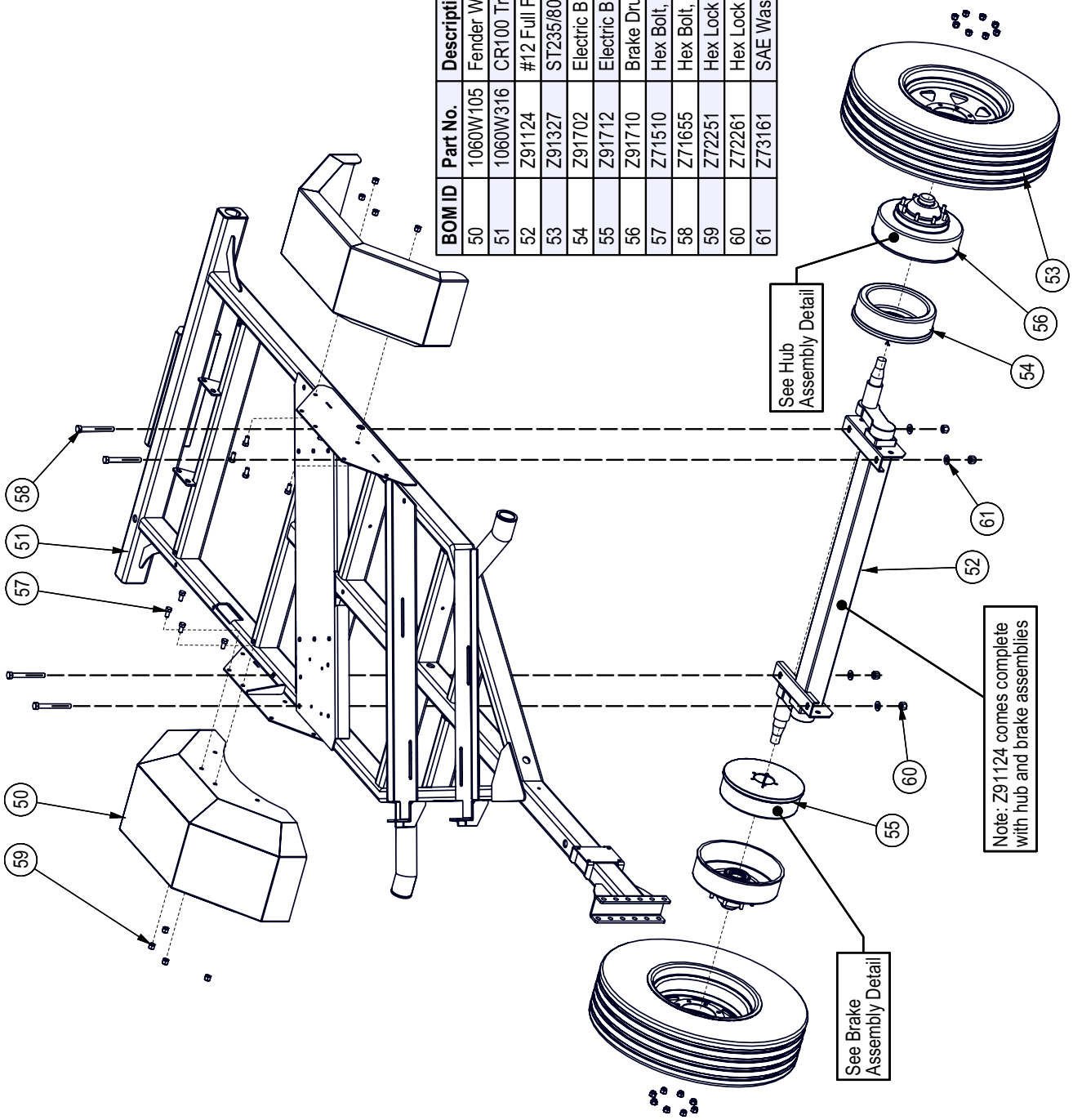

BOM ID	Part No.	Description	Qty
50	1060W105	Fender Well Weldment	2
51	1060W316	CR100 Trailer Weldment	1
52	Z91124	#12 Full Flex Axle, 7000lbs x 60" HF With Electric Brakes	1
53	Z91327	ST235/80R16 LRE Radial Trail 8on6-1/2"	2
54	Z91702	Electric Brake, 12" x 2" x 3500lbs LH	1
55	Z91712	Electric Brake, 12" x 2" x 3500lbs RH	1
56	Z91710	Brake Drum, 12" x 3500lbs 8on6-1/2" Drum Only	2
57	Z71510	Hex Bolt, 1/2NC x 1"	8
58	Z71655	Hex Bolt, 5/8NC x 5-1/2"	4
59	Z72251	Hex Lock Nut, 1/2NC	8
60	Z72261	Hex Lock Nut, 5/8NC	4
61	Z73161	SAE Washer, 5/8"	4

Hub Assembly

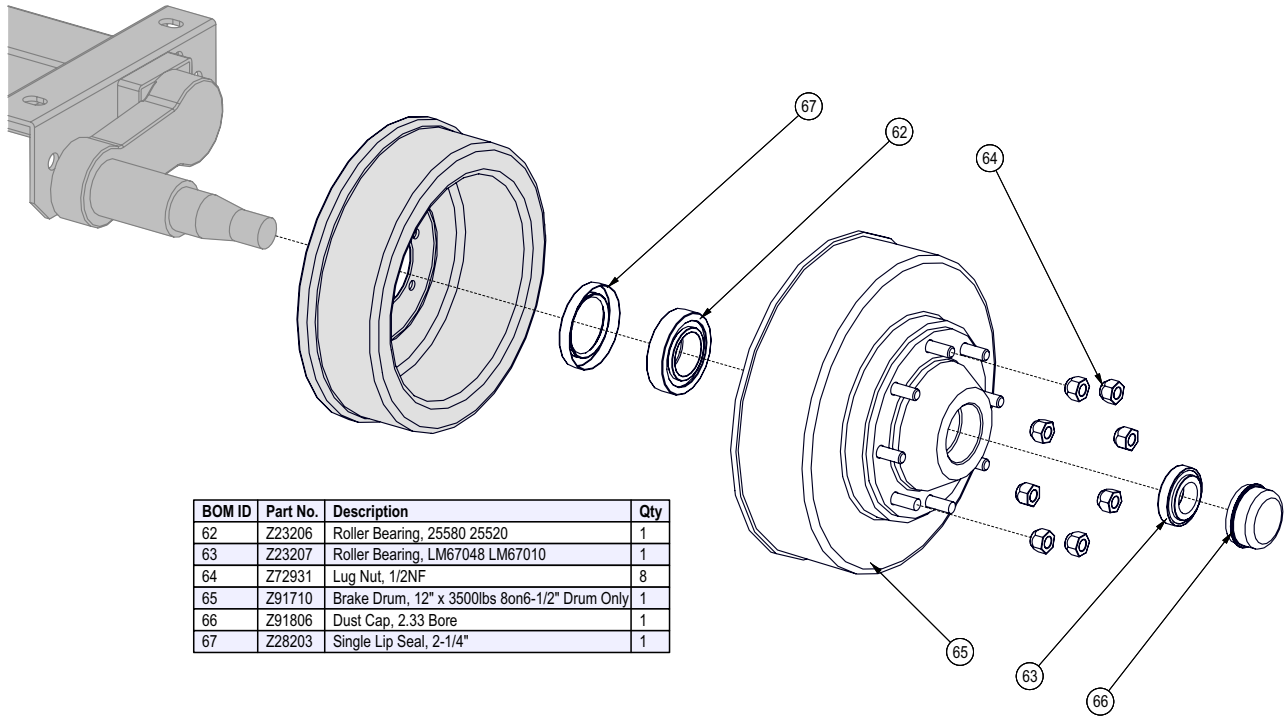

BOM ID	Part No.	Description	Qty
62	Z23206	Roller Bearing, 25580 25520	1
63	Z23207	Roller Bearing, LM67048 LM67010	1
64	Z72931	Lug Nut, 1/2NF	8
65	Z91710	Brake Drum, 12" x 3500lbs 8on6-1/2" Drum Only	1
66	Z91806	Dust Cap, 2.33 Bore	1
67	Z28203	Single Lip Seal, 2-1/4"	1

Brake Assembly

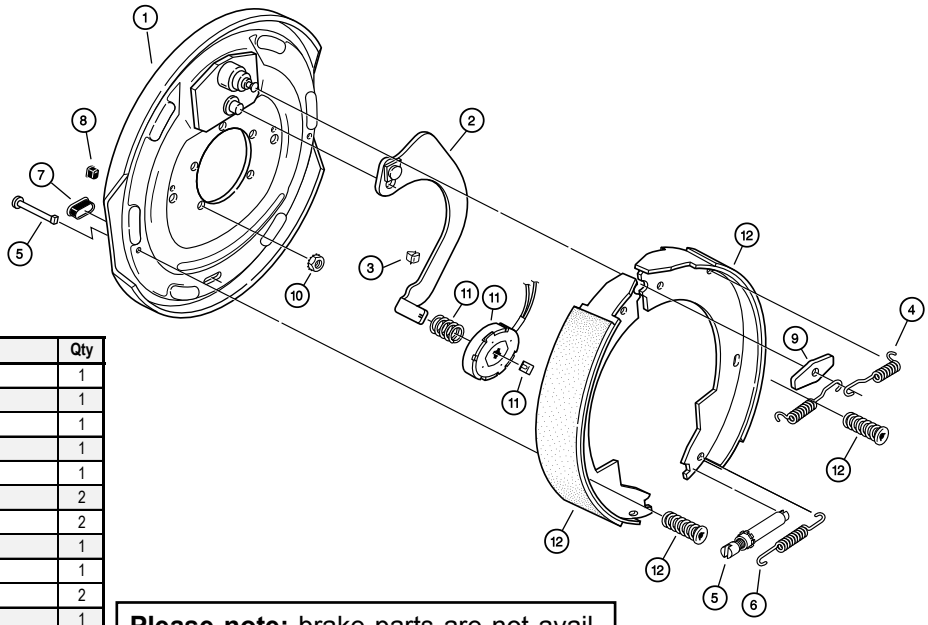

Item	Part No.	Description	Qty
	Z91702	LH Complete Brake Assembly	1
	Z91712	RH Complete Brake Assembly (shown)	1
1	036-089-05	Backing Plate Assembly	1
2	047-107-05	LH Actuating Lever Arm Assembly	1
2	047-108-05	RH Actuating Lever Arm Assembly	1
3	027-005-00	Wire Clip	2
4	046-009-00	Retractor Spring	2
5	043-004-00	Adjuster Assembly	1
6	046-018-00	Adjusting Screw Spring	1
7	046-007-00	Adjuster Slot Plug	2
8	046-016-00	Wire Grommet	1
9	005-067-00	Anchor Post Washer	1
10	006-193-00	Nut Washer Assembly	5
11	K71-105-00	Magnet Kit Contains:	1
		Magnet (white wire)	1
		Magnet Clip	1
		Magnet Spring	1
12	K71-048-00	Shoe & Lining Kit Contains:	1
		Primary Shoe & Lining	1
		Secondary Shoe & Lining	1
		Shoe Hold Down Pin #2	2
		Shoe Hold Down Spring & Cup	2

Please note: brake parts are not available from EMB Mfg. Brake part numbers here reference Dexter Axle brake assemblies and are available from your local auto parts dealer. All brake repair and maintenance should be done by a qualified mechanic.

Engine Carriage

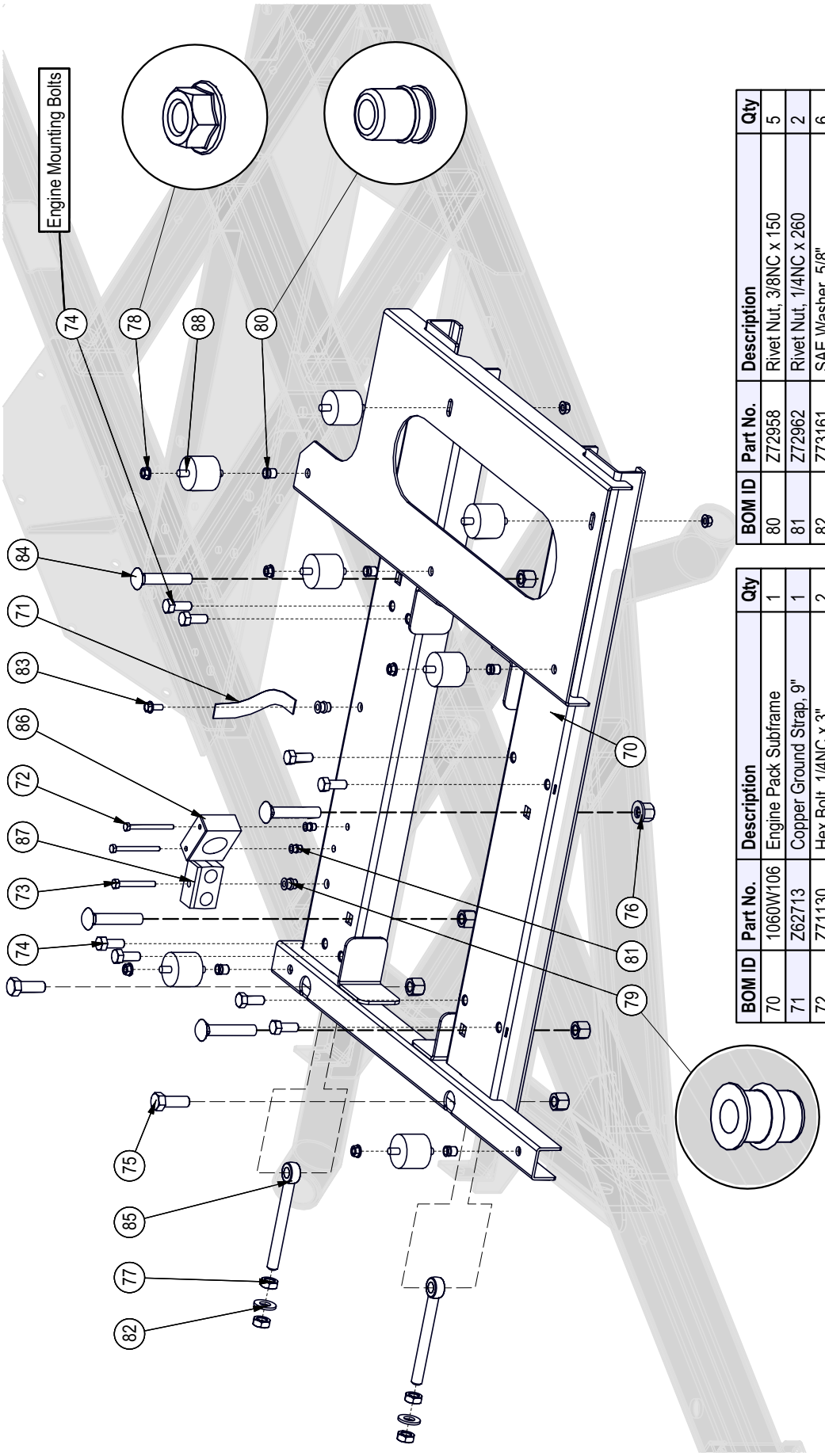

BOM ID	Part No.	Description	Qty
70	1060W106	Engine Pack Subframe	1
71	Z62713	Copper Ground Strap, 9"	1
72	Z71130	Hex Bolt, 1/4NC x 3"	2
73	Z71225	Hex Bolt, 5/16NC x 2-1/2"	1
74	Z71512	Hex Bolt, 1/2NC x 1-1/4"	8
75	Z71617	Hex Bolt, 5/8NC x 1-3/4"	2
76	Z72261	Hex Lock Nut, 5/8NC	6
77	Z72361	Jam Nut, 5/8NC	4
78	Z72531	Serrated Flange Locknut, 3/8NC	7
79	Z72957	Rivet Nut, 5/16NC x 312	2

BOM ID	Part No.	Description	Qty
80	Z72958	Rivet Nut, 3/8NC x 150	5
81	Z72962	Rivet Nut, 1/4NC x 260	2
82	Z73161	SAE Washer, 5/8"	6
83	Z76121	Flange Bolt, 5/16NC x 3/4"	1
84	Z76265	Carriage Bolt, 5/8NC x 3-1/2"	4
85	Z76561	Rod End, 5/8NC x 6" Full Threads	2
86	Z79457	Single Hose Clamp, 1-1/2" OD	1
87	Z79464	Double Hose Clamp, 13/16" OD	1
88	Z79932	Isolator, 2" Dia x 1-5/8" x 3/8NC	7

Engine

BOM ID	Part No.	Description	Qty
90	Z47608	Kubota V3600T c/w Clutch and Kits	1
91	1060W132	Air Intake Clamp	1
92	Z41520	Hub, SK x 2-1/4" x 5/8" Keyway	1
93	Z41771	Sheave, 4B80 x SK	1
94	Z46598	Key, 3/8" x 5/8" x 3-1/2"	1
95	Z47908	Air Duct, 3-3/4" x 6"	1
96	Z51594	Straight, MHB x FJICX 1616	1
97	Z51647	Straight, MJIC x MORB 0810	1
98	Z51659	Elbow 90, MJIC x MORB 1610	1
99	Z53115	Gear Pump, Series 20 x 0.69CIR	1
100	Z55801	O-Ring, Buna-N x #236	1
101	Z62713	Copper Ground Strap, 9"	1
102	Z71220	Hex Bolt, 5/16NC x 2"	3
103	Z74121	Set Screw, 5/16NC x 3/8"	1
104	Z77362	Int - Ext Tooth Washer, M10	1
105	Z77363	Split Lock Washer, M10	1
106	Z77562	SHCS, M10x1.25 x 25mm	2
107	Z77663	Hex Bolt, M10x1.25 x 25mm	1
108	Z79401	Hose Clamp, SAE #16 (1-1/2")	1
109	Z79406	Hose Clamp, SAE #60 (4-1/4")	2
110	Z53116	Tandem Gear Pump, Series 20 x 0.30CIR + 0.50CIR	1

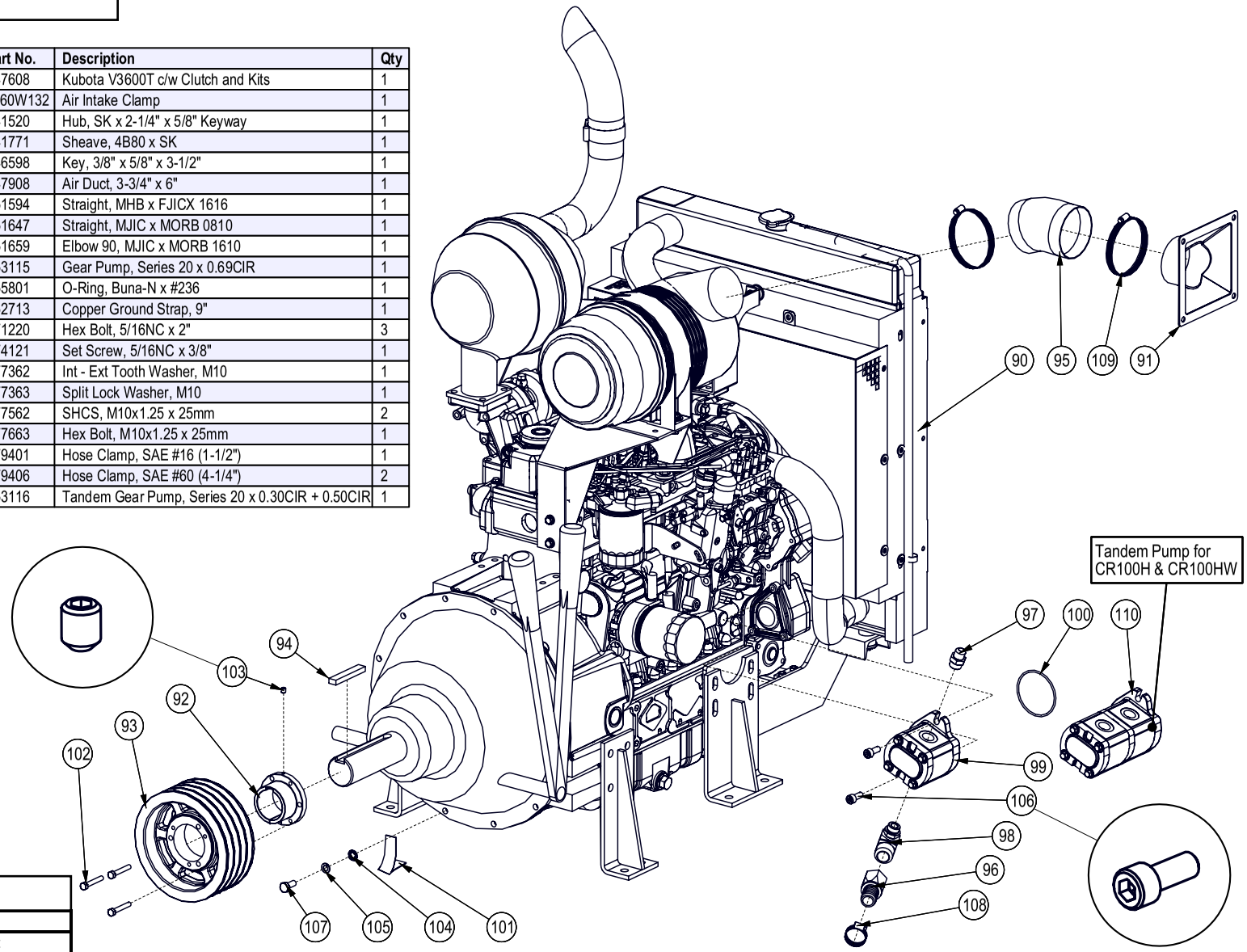

Engine Parts

Part #	Description
107010001559 (P828889	Primary Air Filter Element Donaldson Primary Filter)
107010001560 (P829333	Safety Element Donalsdson Safety Element)
106200000515	Air Filter Case (Includes Filters) (G082526)
106200000062	Coolant Overflow Bottle
106010002269	Rad Cap

Part #	Description
SK PL20-S/D-31	Seal Kit for Z53115 Pump
PL20/20-S/D-31/S7	Seal Kit for Z53116 Pump

Note: for more information on Kubota V3600T Diesel Engine, please review the Kubota's Owners Manual.

Engine Compartment Shroud

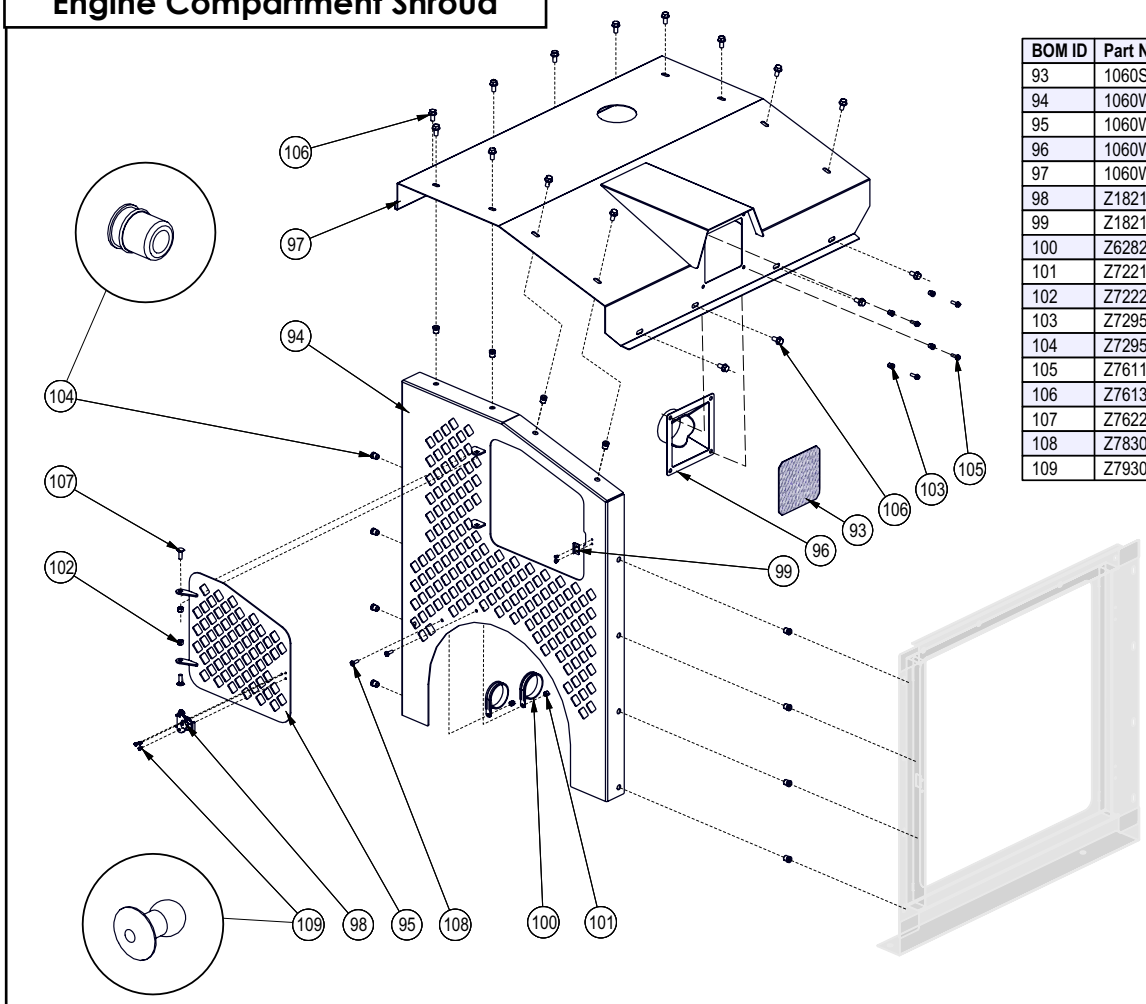

BOM ID	Part No.	Description	Qty
93	1060S108	Air Intake Screen	1
94	1060W267	Engine Vent Screen Weldment	1
95	1060W268	Air Cleaner Access Door	1
96	1060W132	Air Intake Clamp	1
97	1060W136	Enclosure Hood Weldment	1
98	Z18215	Twist Action Draw Latch, 2-3/4"	1
99	Z18216	Catch for Z18215	1
100	Z62826	Rubberized Wire Clamp, 2-1/2"	2
101	Z72211	Hex Lock Nut, 1/4NC	2
102	Z72221	Hex Lock Nut, 5/16NC	2
103	Z72955	Rivet Nut, 1/4NC x 165	4
104	Z72958	Rivet Nut, 3/8NC x 150	12
105	Z76111	Flange Bolt, 1/4NC x 3/4"	4
106	Z76133	Flange Bolt, 3/8NC x 3/4"	16
107	Z76225	Carriage Bolt, 5/16NC x 1"	2
108	Z78301	Machine Screw, 1/4NC x 3/4"	2
109	Z79305	Dome Head Rivet, 5/32" x 188	5

Engine Compartment Door

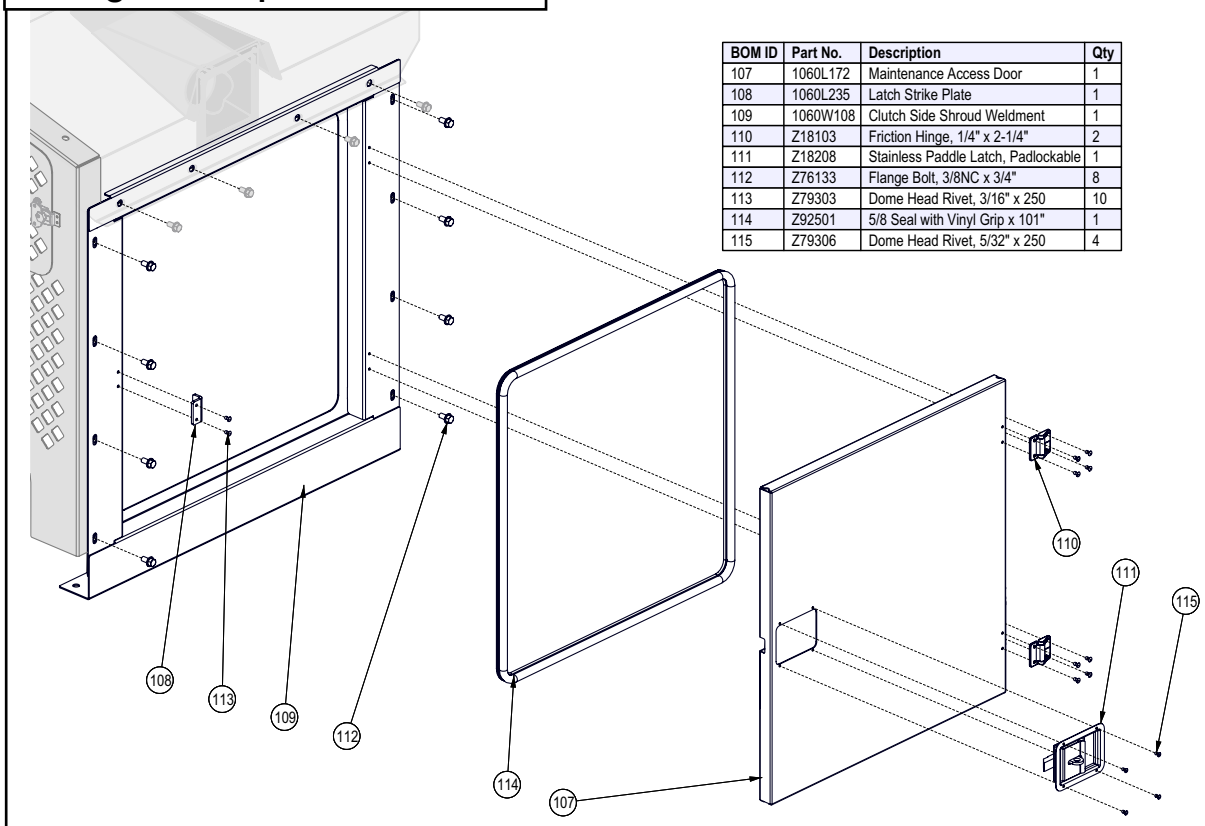

BOM ID	Part No.	Description	Qty
107	1060L172	Maintenance Access Door	1
108	1060L235	Latch Strike Plate	1
109	1060W108	Clutch Side Shroud Weldment	1
110	Z18103	Friction Hinge, 1/4" x 2-1/4"	2
111	Z18208	Stainless Paddle Latch, Padlockable	1
112	Z76133	Flange Bolt, 3/8NC x 3/4"	8
113	Z79303	Dome Head Rivet, 3/16" x 250	10
114	Z92501	5/8 Seal with Vinyl Grip x 101"	1
115	Z79306	Dome Head Rivet, 5/32" x 250	4

Radiator Shroud & Screen Door

BOM ID	Part No.	Description	Qty
117	1060L210	Coolant Fill Plate	1
118	1060W124	Radiator Screen Weldment	1
119	1060W138	Radiator Screen Panel Weldment	1
120	Z18207	Spring Latch Pin, 1/2" x 1" Stroke	1
121	Z72221	Hex Lock Nut, 5/16NC	3
122	Z72752	Machine Nut, #10NF	4
123	Z72958	Rivet Nut, 3/8NC x 150	14
124	Z75203	FHCS, #10NF x 3/4"	4
125	Z76133	Flange Bolt, 3/8NC x 3/4"	2
126	Z76225	Carriage Bolt, 5/16NC x 1"	3
127	Z92501	5/8 Seal with Vinyl Grip x 83"	1

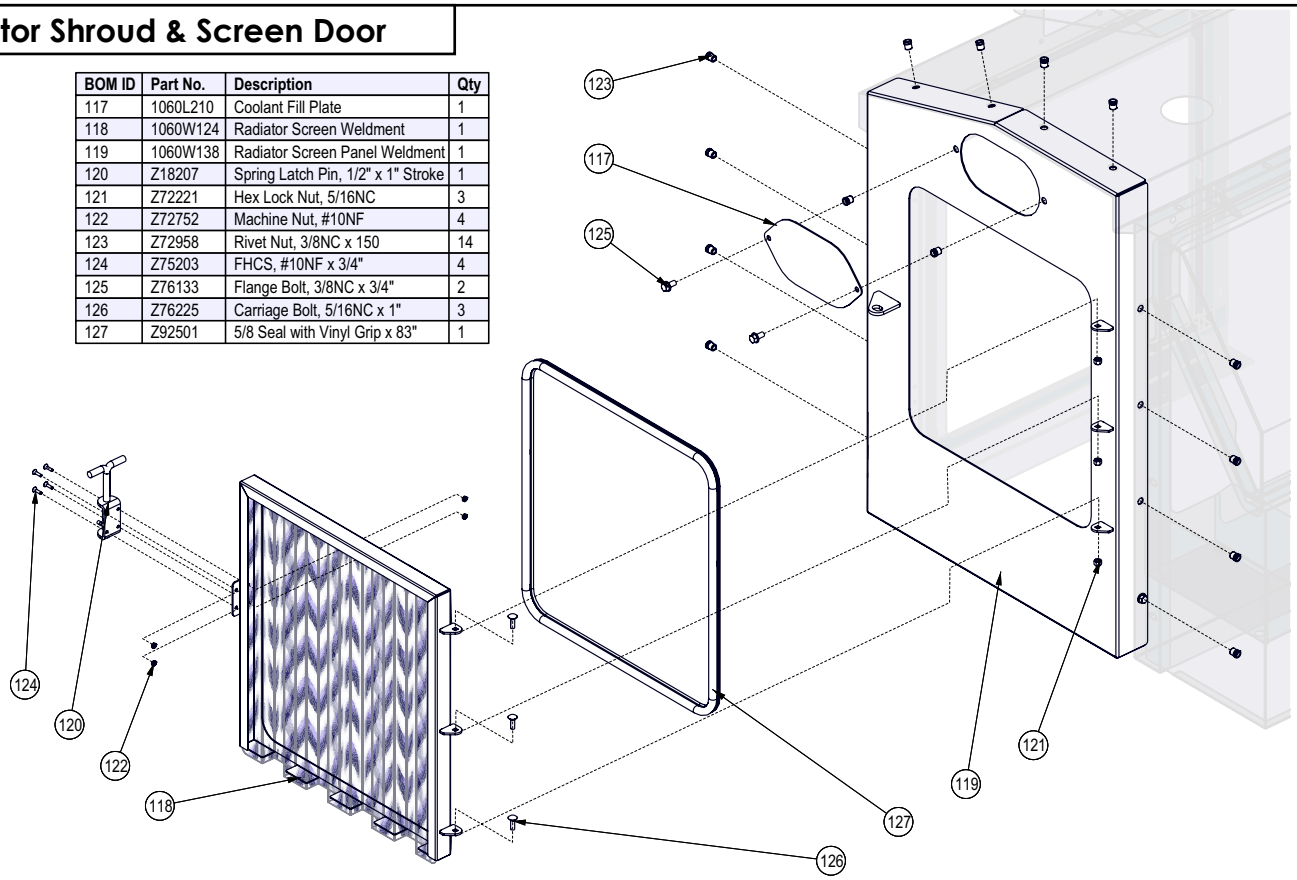

Tank Compartment Shroud

BOM ID	Description	Description	Qty
128	1060L346	Tank Compartment Strike Plate	1
129	1060W119	Shroud, Tank Side Weldment	1
130	1060W253	Tank Door Hinge Rail Weldment	1
131	1060W270	Tank Shroud	1
132	Z34204	Ball Stud 13mm x 5/16	1
133	Z62819	Rubberized Wire Clamp, 1/2"	1
135	Z72231	Hex Lock Nut, 3/8NC	4

BOM ID	Description	Description	Qty
136	Z72521	Serrated Flange Locknut, 5/16NC	3
137	Z72958	Riv-Nut 3/8NC x 150	18
138	Z76133	Flange Bolt, 3/8NC x 3/4	12
139	Z76134	Flange Bolt, 3/8NC x 1	4
140	Z78301	Machine Screw, 1/4-20NC x 3/4	1
141	Z78319	Machine Screw, 5/16NC x 3/4" Locking	3

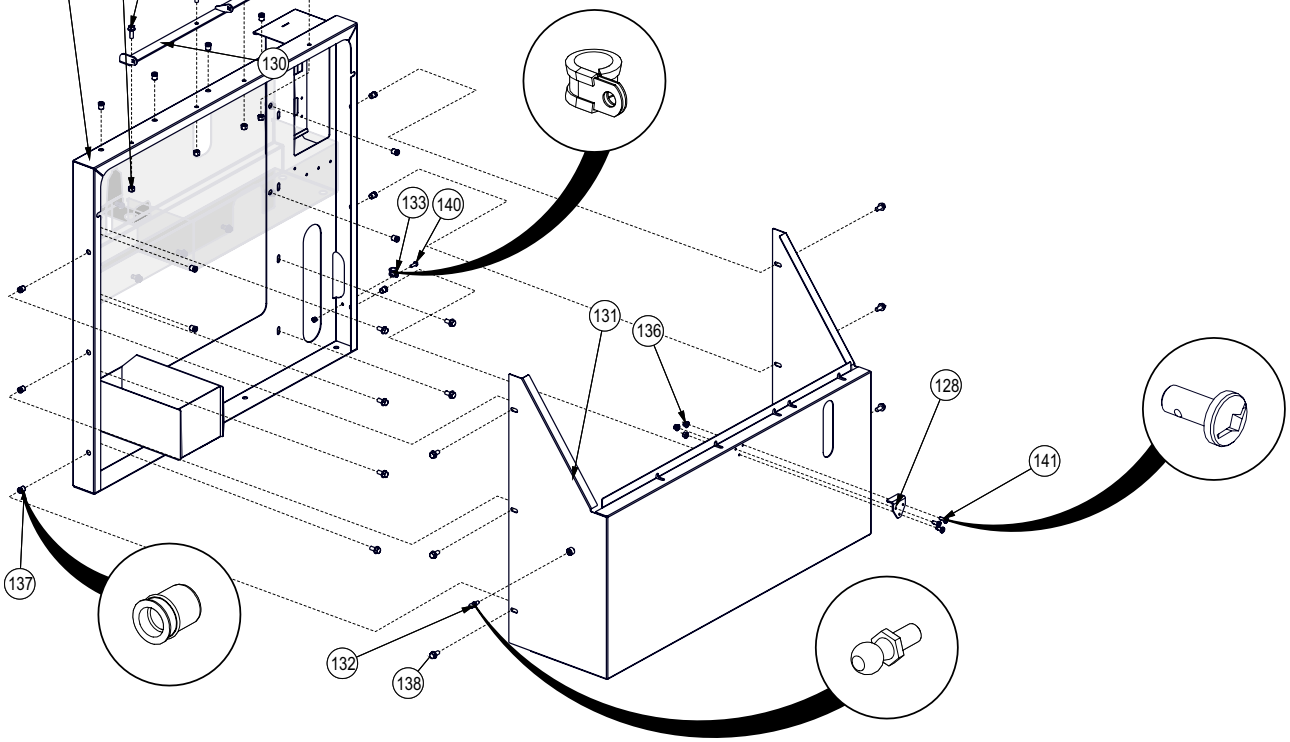

Tank Compartment Tool Tray Detail

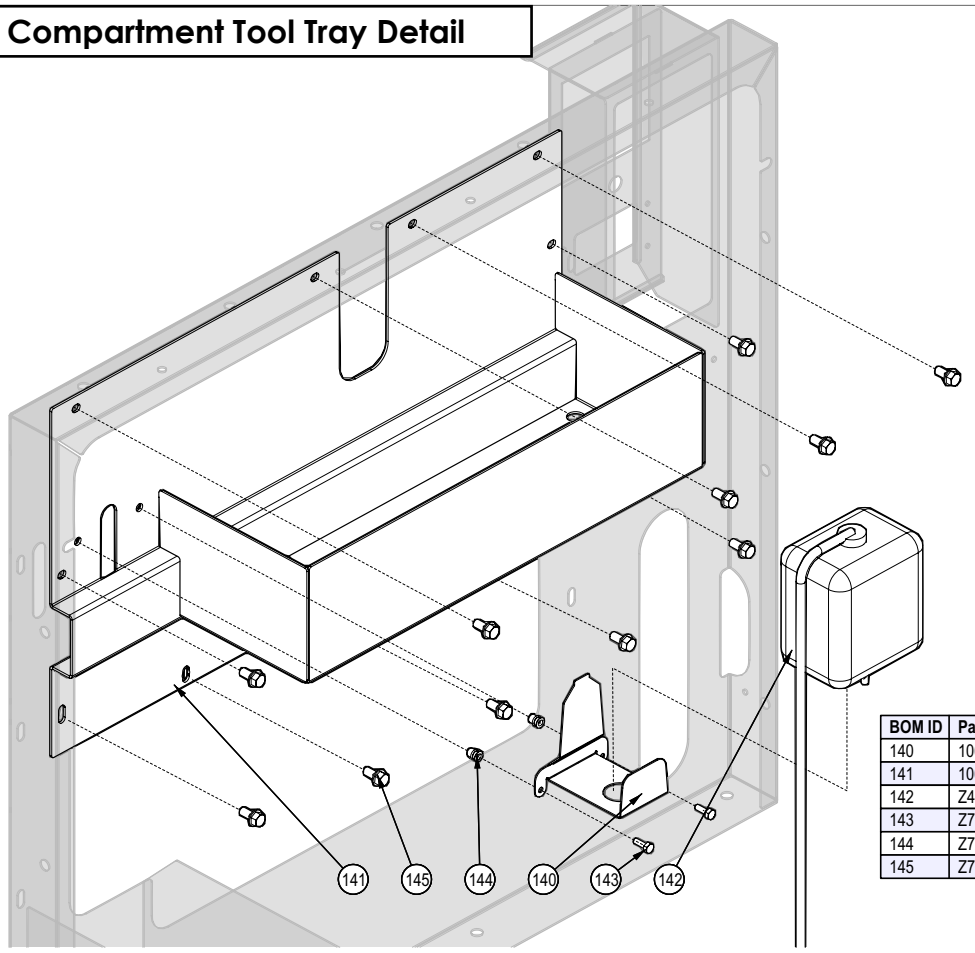

BOM ID	Part #	Description	Qty
140	1060L183	Coolant Overflow Bracket	1
141	1060W133	Toolbox Rail Weldment	1
142	Z47608-3	Coolant Overflow Bottle Kit	1 see below
143	Z71107	Hex Bolt, 1/4NC x 3/4	2
144	Z72955	Riv-Nut 1/4NC x 165	2
145	Z76133	Flange Bolt, 3/8NC x 3/4	11

Control Panel

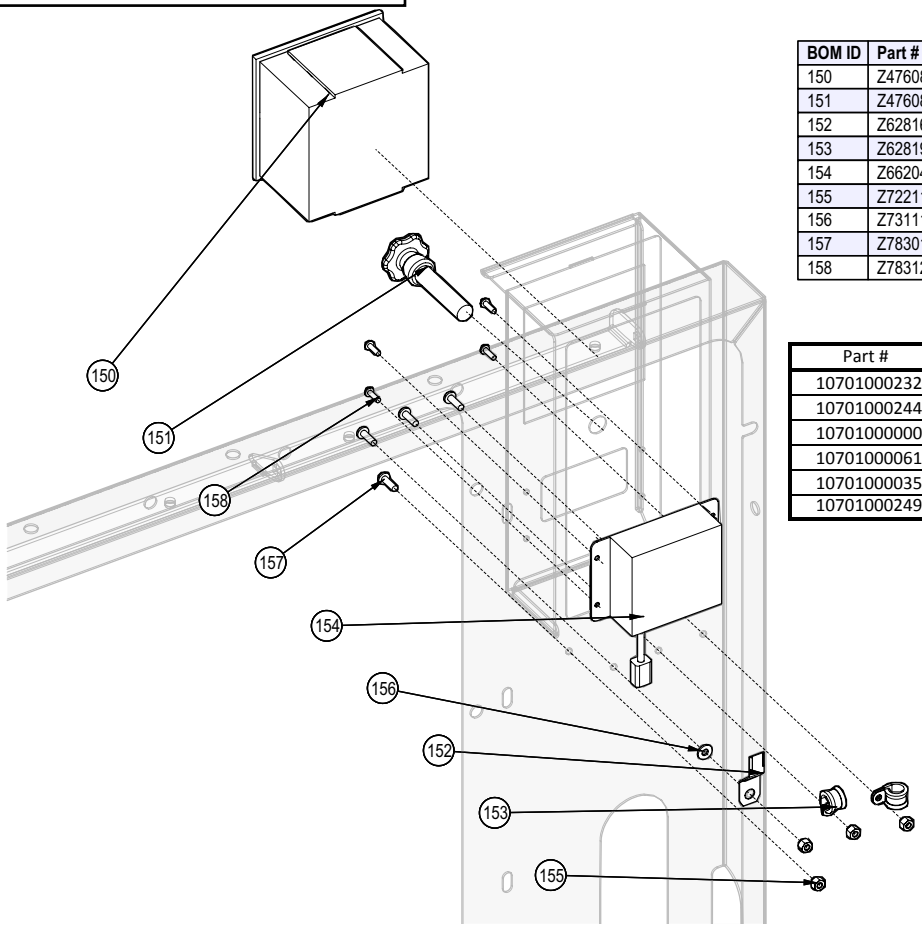

BOM ID	Part #	Description	Qty
150	Z47608-1	Engine Control Box	1 see chart below
151	Z47608-2	Kubota Throttle Assembly	1
152	Z62816	Deutsch Mounting Clip	1
153	Z62819	Rubberized Wire Clamp, 1/2"	2
154	Z66204	Control, IntelliFEED	1
155	Z72211	Hex Lock Nut, 1/4NC	4
156	Z73111	Flat Washer, 1/4	1
157	Z78301	Machine Screw, 1/4-20NC x 3/4	4
158	Z78312	Machine Screw, #10-24NC x 5/8	4

Part #	Description
107010002329	Lofa Panel
107010002445	Tachometer
107010000007	10' vernier cable
107010000610	Black Knob
107010000351	Pivot
107010002493	Threaded Hub

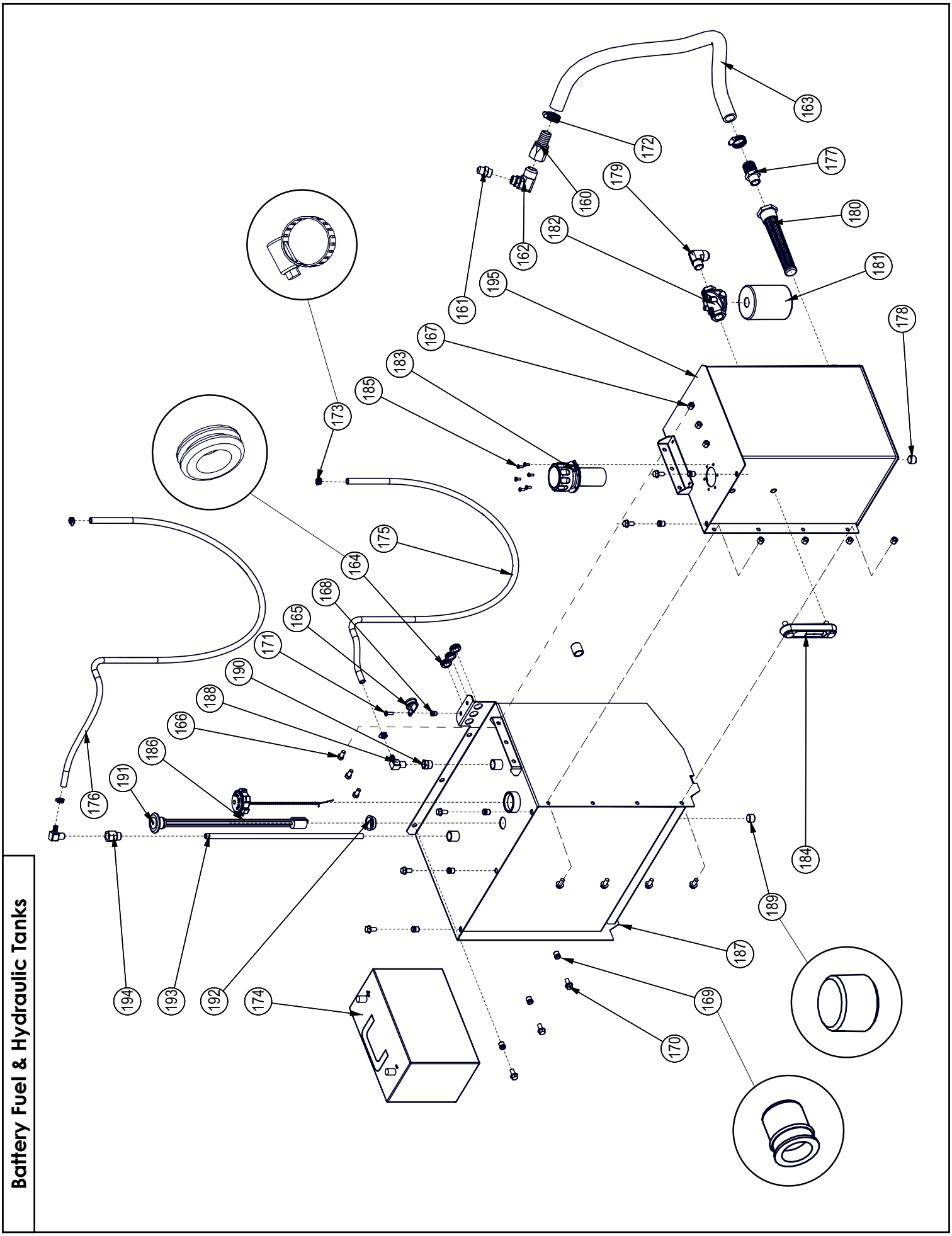
Battery Fuel & Hydraulic Tanks
163
172
177
179
160
180
182
162
181
161
195
178
167
183
185
173
175
164
168
165
171
190
188
166
186
191
176
184
189
187
169
170
174
192
193
194

Battery Fuel & Hydraulic Tanks Parts List

Continued from page 15

BOM ID	Part No.	Description	Qty
160	Z51594	Straight, MHB x FJICX 1616	1
161	Z51647	Straight, MJIC x MORB 0810	1
162	Z51659	Elbow 90, MJIC x MORB 1610	1
163	Z52422	1" Tank Truck Hose x 40"	1
164	Z62823	Rubber Grommet, 5/8" x 1/8"	3
165	Z62824	Rubberized Wire Clamp, 1"	1
166	Z71307	Hex Bolt, 3/8NC x 3/4"	3
167	Z72231	Hex Lock Nut, 3/8NC	7
168	Z72955	Rivet Nut, 1/4NC x 165	1
169	Z72958	Rivet Nut, 3/8NC x 150	8
170	Z76133	Flange Bolt, 3/8NC x 3/4"	12
171	Z78301	Machine Screw, 1/4NC x 3/4"	1
172	Z79401	Hose Clamp, SAE #16 (1-1/2")	2
173	Z79405	Hose Clamp, SAE #4 (5/8")	4
174	Z93217	Battery, 31A-950	1
175	Z93311a	Fuel Line, 5/16 x 58"	1
176	Z93311b	Fuel Line, 5/16 x 66"	1
177	Z51188	Straight, MHB x MP 1612	1
178	Z51192	Socket Plug, MP 08	1
179	Z51454	Elbow 90, MJIC X MP 1212	1
180	Z55101	Suction Strainer, MP20	1
181	Z55301	Particulate Filter, FP12	1
182	Z55302	Filter Cap, MP12 x FP12	1
183	Z55403	Filler Breather Cap x 400um Locking	1
184	Z55908	Level Thermometer, 1/2NC x 5"	1
185	Z78303	Machine Screw, #10NF x 1/2"	6
186	1060A140	TIPS Diesel Fuel Cap, Tethered	1
187	1060W115	Fuel Tank Weldment	1
188	Z51189	Elbow 90, MHB x MP 0506	2
189	Z51192	Socket Plug, MP 08	1
190	Z51226	Straight, MP x FP 0806	1
191	Z93112	Fuel Gauge, Grommet Mount x 18"	1
192	Z93115	Fuel Gauge Grommet for Z93113	1
193	1060S103	Fuel Pickup Tube	1
194	1060m103	Custom Adapter MP08 x FP06	1
195	1060W114	Hydraulic Tank Weldment	1

Tank Compartment Lid

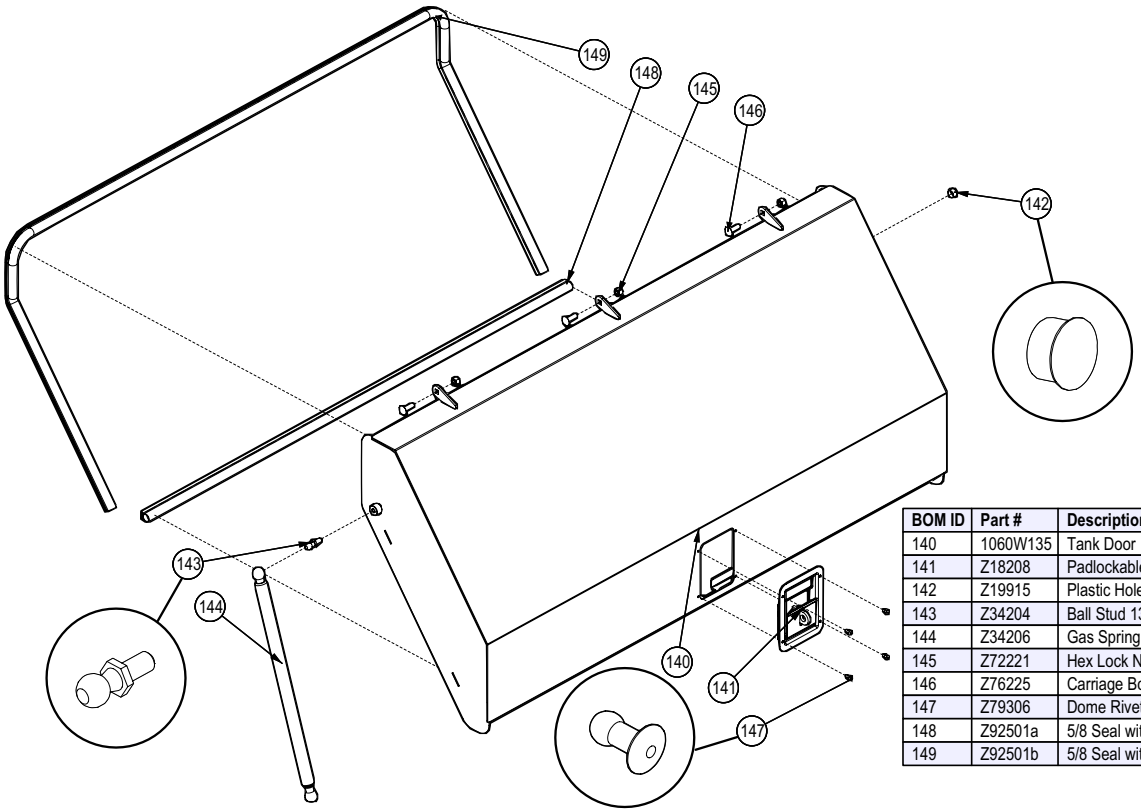

BOM ID	Part #	Description	Qty
140	1060W135	Tank Door	1
141	Z18208	Padlockable Paddle Latch	1
142	Z19915	Plastic Hole Plug 9/16"	1
143	Z34204	Ball Stud 13mm x 5/16	1
144	Z34206	Gas Spring, 10mm x 11" Stroke 50lbs	1
145	Z72221	Hex Lock Nut, 5/16NC	3
146	Z76225	Carriage Bolt, 5/16NC x 1	3
147	Z79306	Dome Rivet, 5/32" x 1/4"	4
148	Z92501a	5/8 Seal with Vinyl Grip x 42"	1
149	Z92501b	5/8 Seal with Vinyl Grip x 99"	1

Discharge Chute

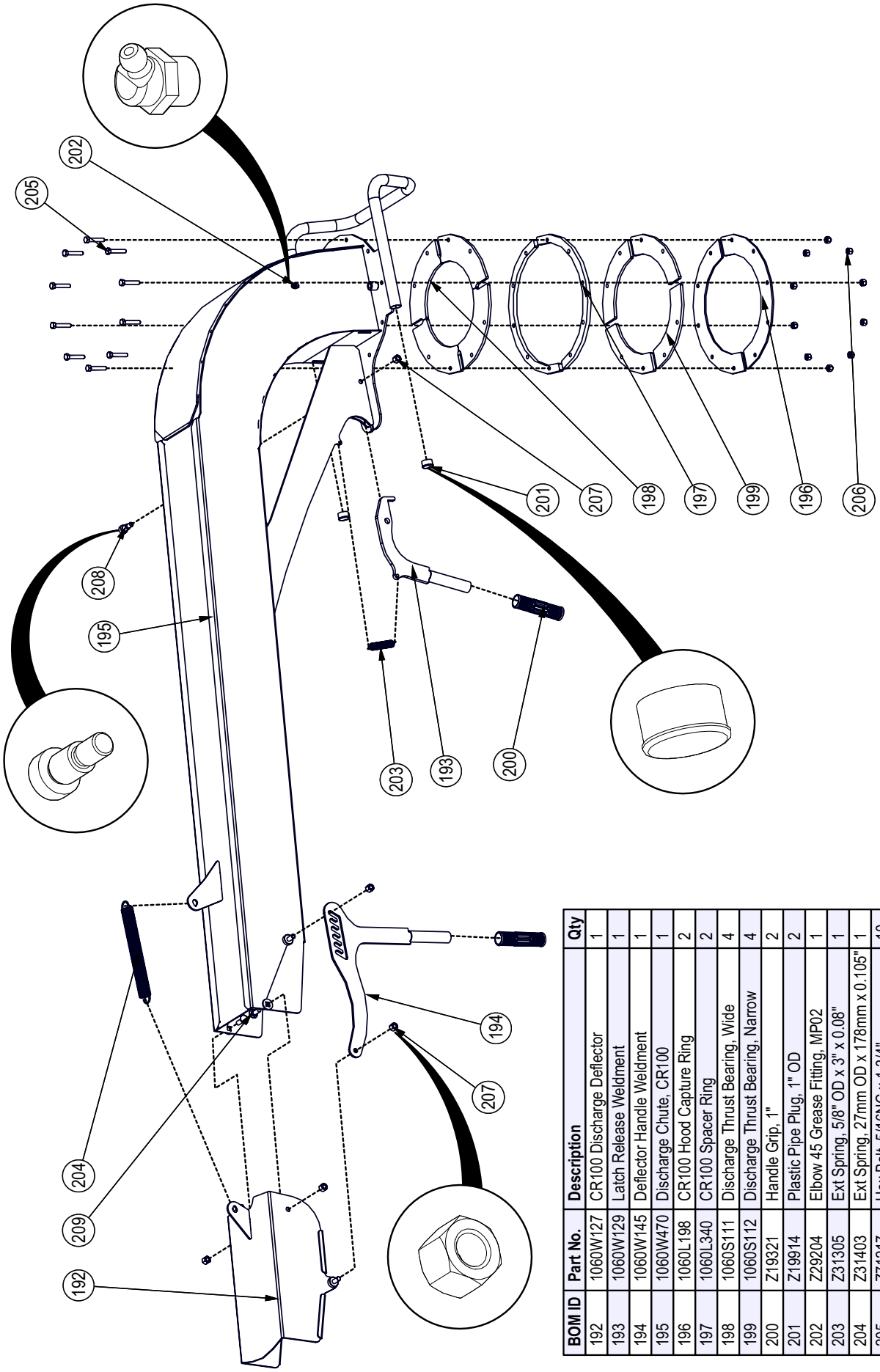

BOM ID	Part No.	Description	Qty
192	1060W127	CR100 Discharge Deflector	1
193	1060W129	Latch Release Weldment	1
194	1060W145	Deflector Handle Weldment	1
195	1060W470	Discharge Chute, CR100	1
196	1060L198	CR100 Hood Capture Ring	2
197	1060L340	CR100 Spacer Ring	2
198	1060S111	Discharge Thrust Bearing, Wide	4
199	1060S112	Discharge Thrust Bearing, Narrow	4
200	Z19321	Handle Grip, 1"	2
201	Z19914	Plastic Pipe Plug, 1" OD	2
202	Z29204	Elbow 45 Grease Fitting, MP02	1
203	Z31305	Ext Spring, 5/8" OD x 3" x 0.08"	1
204	Z31403	Ext Spring, 27mm OD x 178mm x 0.105"	1
205	Z71217	Hex Bolt, 5/16NC x 1-3/4"	10
206	Z72221	Hex Lock Nut, 5/16NC	10
207	Z72231	Hex Lock Nut, 3/8NC	5
208	Z75552	Shoulder Bolt, 1/2" x 5/8"	1
209	Z76231	Carriage Bolt, 3/8NC x 1"	2

Rotor Housing Rear

BOM ID	Part No.	Description	Qty
210	1019M904	Knife, BX92 Ledger	1
211	1021L150	Ledger Washer	2
212	1060L284	Hood Closure Interface	2
213	1060W102	Lower Housing Weldment, Trailer	1
214	1060W103	Twig Breaker, CR100	1
215	1060W126	CR100 Upper Housing	1
216	1060W150	Square to Round Weldment	1
217	Z19321	Handle Grip, 1"	1
218	Z71310	Hex Bolt, 3/8NC x 1"	7
219	Z71515	Hex Bolt, 1/2NC x 1-1/2"	6
220	Z71572G8	Hex Bolt 1/2NF x 7/8 Gr8	2
221	Z71579G8	Hex Bolt, 1/2NF x 1-3/4" G8	2
222	Z72231	Hex Lock Nut, 3/8NC	7
223	Z73151	SAE Washer, 1/2"	12
224	Z72251	Hex Lock Nut, 1/2NC	10
225	Z76552	Rod End, 1/2NC x 5" Full Threads	2
226	1012L269	Gauge, Ledger Setting	1
227	Z14153	Roll Pin, 3/16" x 1"	1
228	1060S113	Hood Lock Pin	1
229	1060F001	Safety Cable, 1/16" x 18"	1

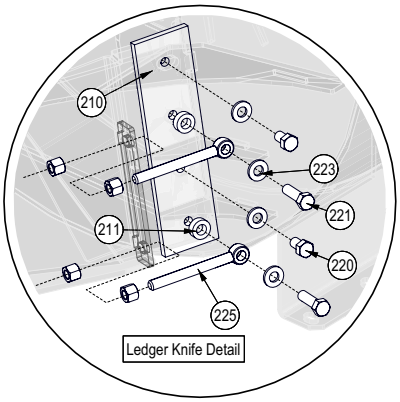

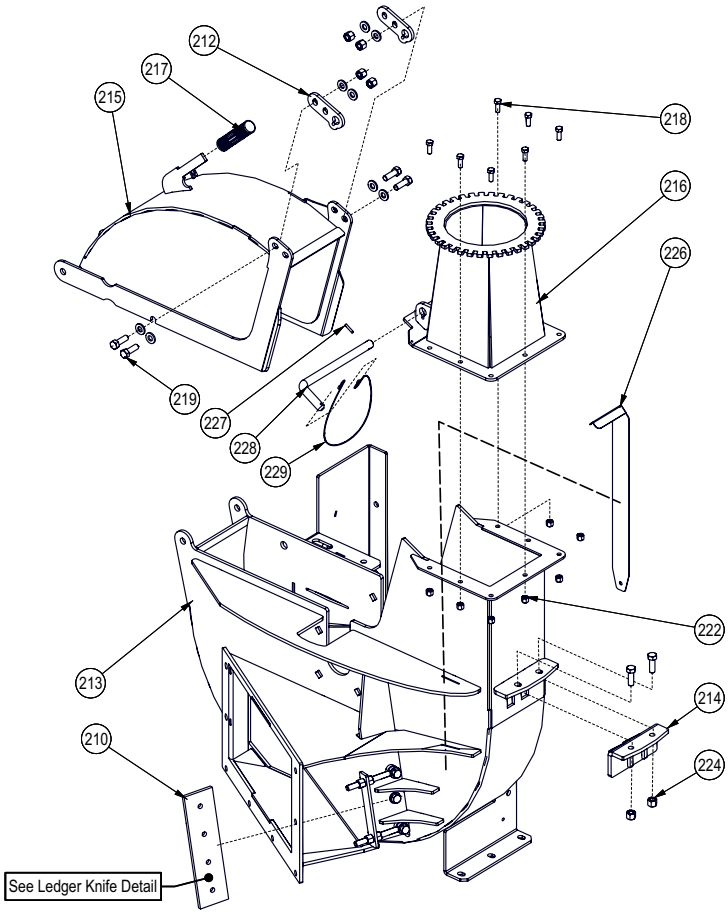

Rotor Housing Front

BOM ID	Part No.	Description	Qty
240	1021L155	Rotation Stop	1
241	Z18210	Spring Latch Pin, 1/2" x 1" Stroke No Pegs	1
242	Z62819	Rubberized Wire Clamp, 1/2"	2
243	Z62821	Rubberized Wire Clamp, 5/8"	1
244	Z62822	Rubber Grommet, 3/4" x 1/4"	1
245	Z62823	Rubber Grommet, 5/8" x 1/8"	4
246	Z63607	Deutsch Bulkhead Receptacle, 8-Pin w/ Aluminum Body	1
247	Z63608	Deutsch Plug, 8-Pin w/ Aluminum Body	1
248	Z71662	Hex Bolt, 5/8NC x 10"	1
249	Z72211	Hex Lock Nut, 1/4NC	3
250	Z72261	Hex Lock Nut, 5/8NC	1
251	Z72271	Hex Lock Nut, 3/4NC	2
252	Z72752	Machine Nut, #10NF	8
253	Z72959	Rivet Nut, 3/8NC x 312	7
254	Z73161	SAE Washer, 5/8"	2
255	Z73171	SAE Washer, 3/4"	2
256	Z75203	FHCS, #10NF x 3/4"	4
257	Z78301	Machine Screw, 1/4NC x 3/4"	3

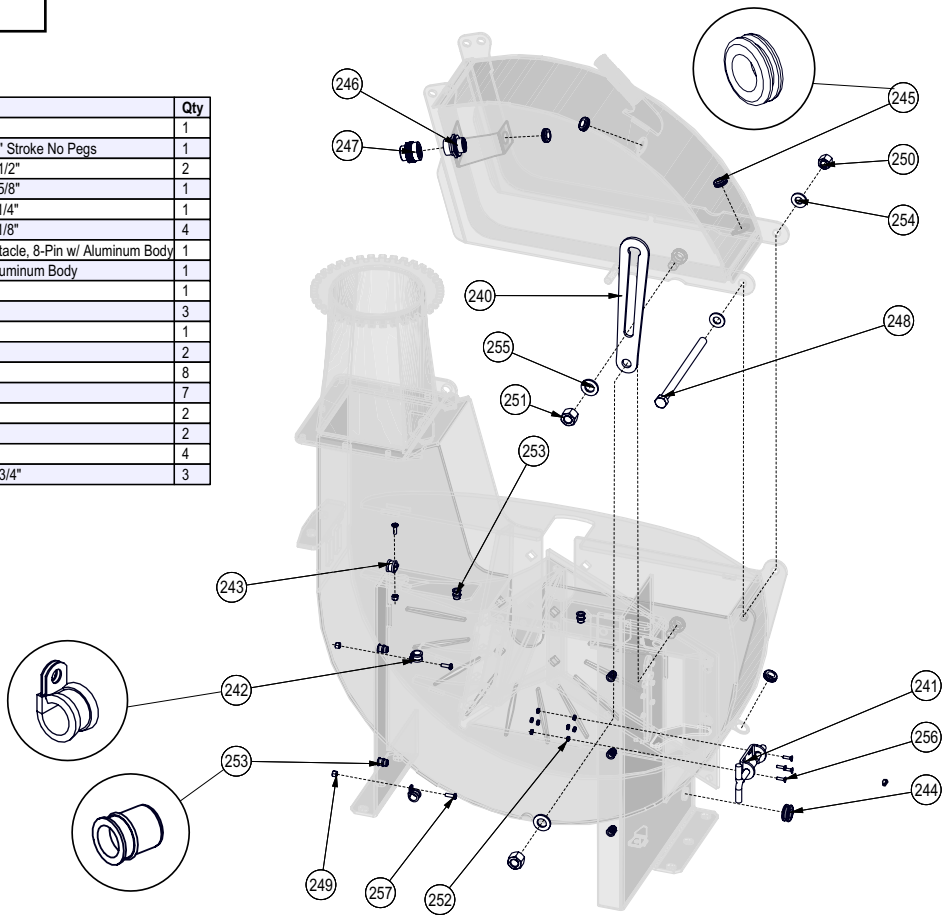

Rotor Interlock Latch

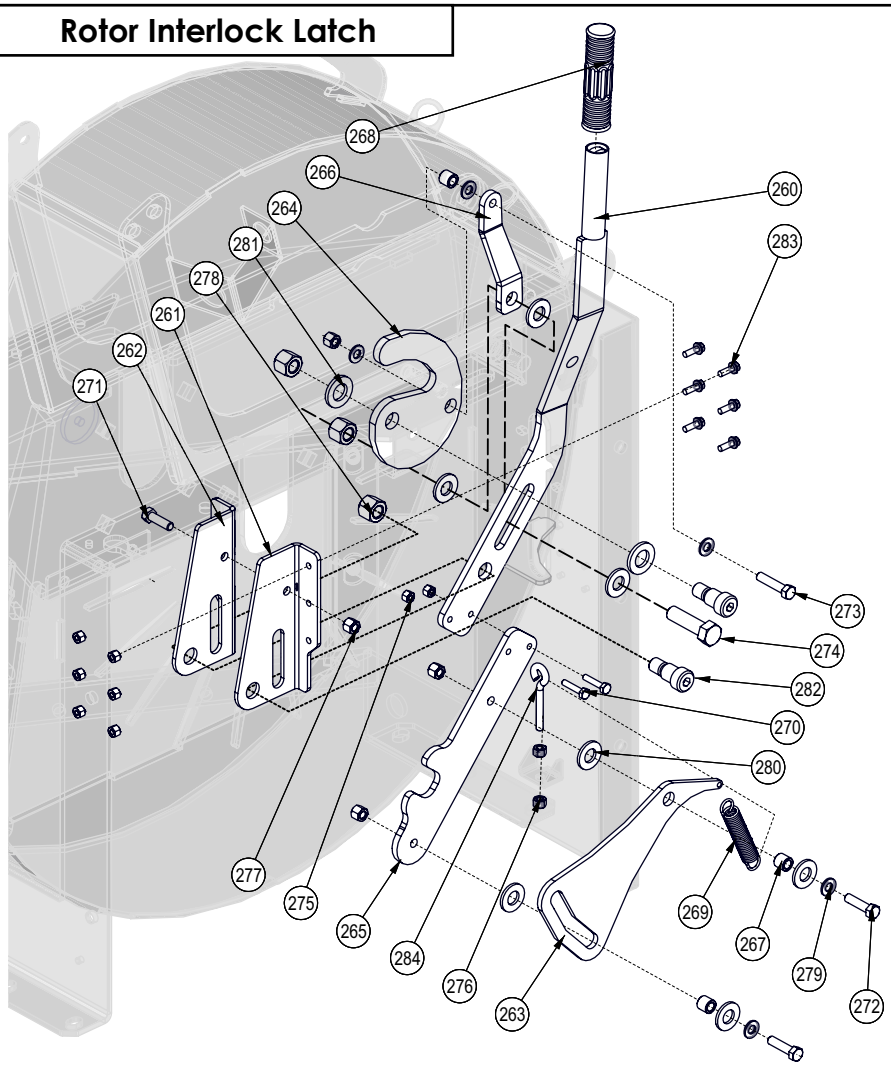

BOM ID	Part No.	Description	Qty
260	1060W256	Interlock Engage Handle	1
261	1060L281	Interlock Handle Base LH	1
262	1060L281H	1060L281 Mirror	1
263	1060L282	Interlock Early Warning	1
264	1060L287	Rotor Hood Safety Latch	1
265	1060L328	Interlock Tip	1
266	1060L330	Linkage	1
267	1056M115	Spacer, Shredder .580	3
268	Z19321	Handle Grip, 1"	1
269	Z31401	Ext Spring, 3/4" OD x 4" x 0.105"	1
270	Z71112	Hex Bolt, 1/4NC x 1-1/4"	2
271	Z71312	Hex Bolt, 3/8NC x 1-1/4"	1
272	Z71315	Hex Bolt, 3/8NC x 1-1/2"	2
273	Z71317	Hex Bolt, 3/8NC x 1-3/4"	1
274	Z71622	Hex Bolt, 5/8NC x 2-1/4"	1
275	Z72211	Hex Lock Nut, 1/4NC	8
276	Z72221	Hex Lock Nut, 5/16NC	2
277	Z72231	Hex Lock Nut, 3/8NC	4
278	Z72261	Hex Lock Nut, 5/8NC	3
279	Z73131	SAE Washer, 3/8"	5
280	Z73161	SAE Washer, 5/8"	7
281	Z73171	SAE Washer, 3/4"	2
282	Z75572	Shoulder Bolt, 3/4" x 3/4"	2
283	Z76111	Flange Bolt, 1/4NC x 3/4"	6
284	Z76522	Eye Bolt, 5/16NC x 2"	1

Rotor Interlock Clutch

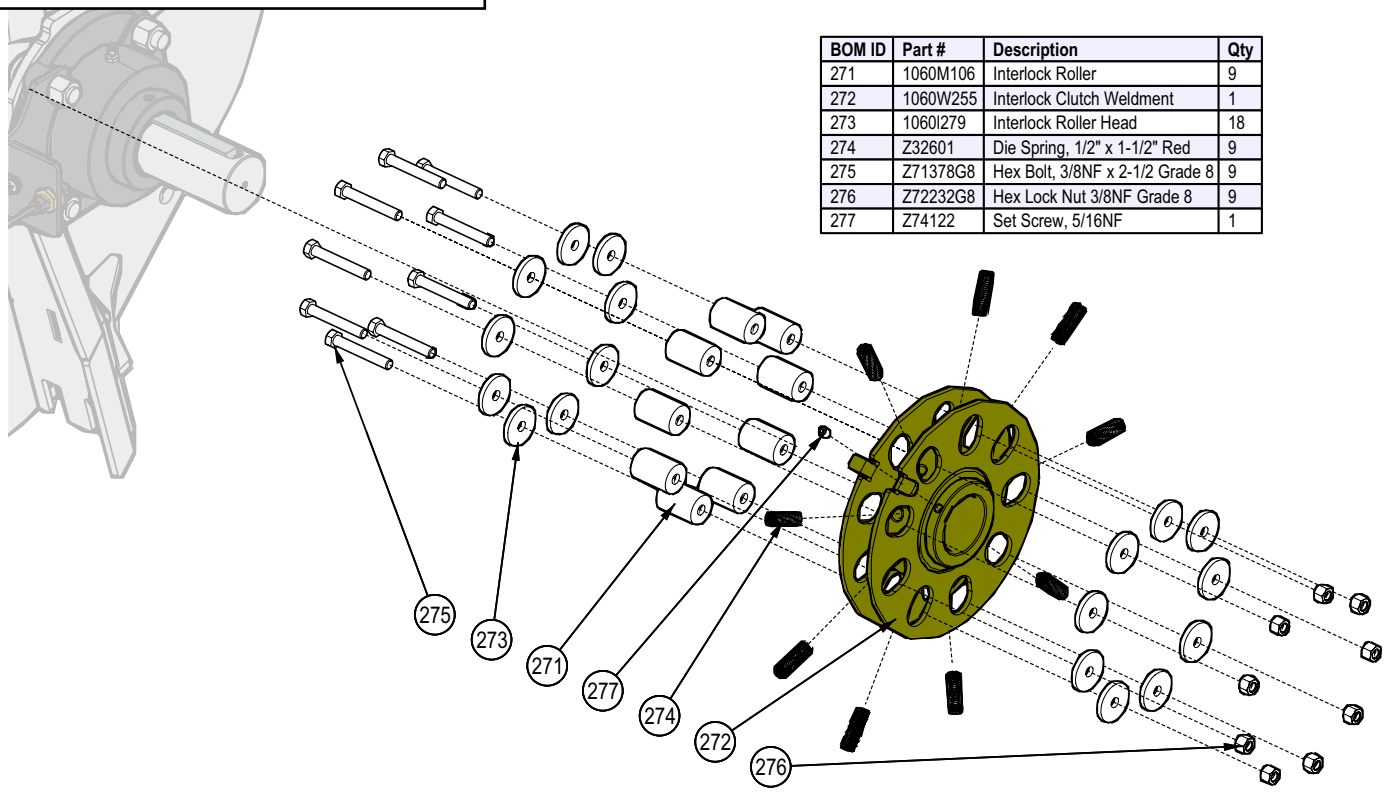

BOM ID	Part #	Description	Qty
271	1060M106	Interlock Roller	9
272	1060W255	Interlock Clutch Weldment	1
273	1060I279	Interlock Roller Head	18
274	Z32601	Die Spring, 1/2" x 1-1/2" Red	9
275	Z71378G8	Hex Bolt, 3/8NF x 2-1/2 Grade 8	9
276	Z72232G8	Hex Lock Nut 3/8NF Grade 8	9
277	Z74122	Set Screw, 5/16NF	1

BOM ID	Part #	Description	Qty
278	1019M903	Knife, BX92 Rotor	4
279	1060L110	Spacer, Bearing Mount CR100	2
280	1060L231	Sensor Mounting Bracket, CR100	1
281	1060W101	Rotor, 10" Trailer Weldment	1
282	Z25210	Spherical Roller Flange Unit 2-7/16"	2
283	Z29201	Grease Fitting, 1/8NPT	2
284	Z41313	Quad "B" Belt x 80"	1
285	Z41519	Bushing, SF 2-1/4" KW5/8	1
286	Z41772	Sheave, 4B154	1
287	Z46598	Key, 3/8 x 5/8 x 3-1/2"	1
288	Z62819	Rubberized Wire Clamp, 1/2"	1
289	Z66210	IntelliFEED Pickup Sensor with 68" Lead	1
290	Z71320	Hex Bolt, 3/8NC x 2	3
291	Z71575G8	Hex Bolt, 1/2NF x 1-1/4 Gr8	12
292	Z72211	Hex Lock Nut, 1/4NC	1
293	Z72261G8	Hex Lock Nut, 5/8NC Grade 8	8
294	Z72357	Brass Jam Nut, 9/16-18NF	2
295	Z74121	Set Screw, 5/16NC	1
296	Z74141	Set Screw, 7/16NF x 3/8"	4
297	Z75351	BHCS, 5/16NF x 3/4	1
298	Z76264G8	Carriage Bolt, 5/8NC x 2-1/2 Grade 8	8
299	Z78301	Machine Screw, 1/4-20NC x 3/4	1
300	1021S102	Rotation Indicator Cover	1

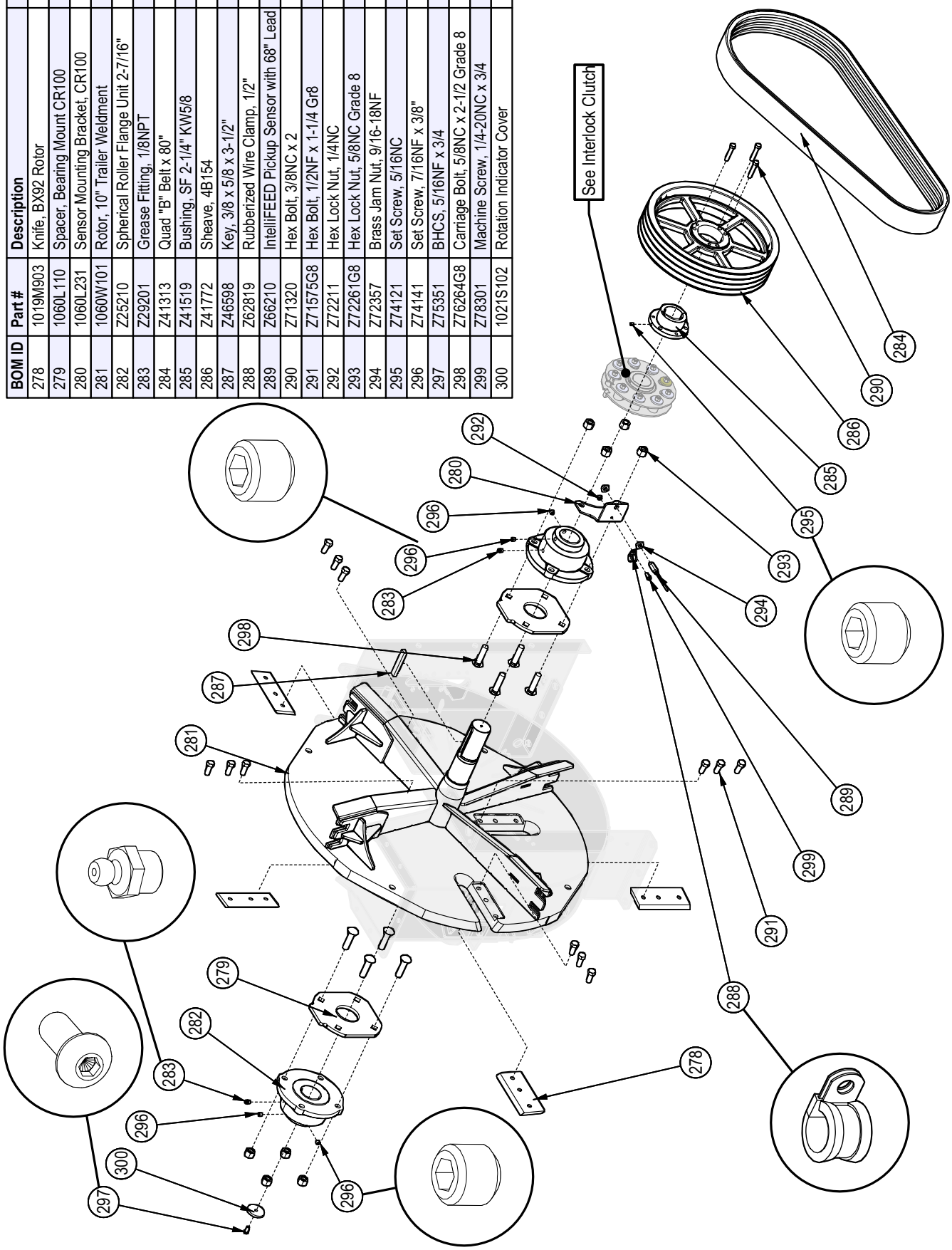

Rotor Assembly

Pulley Shroud

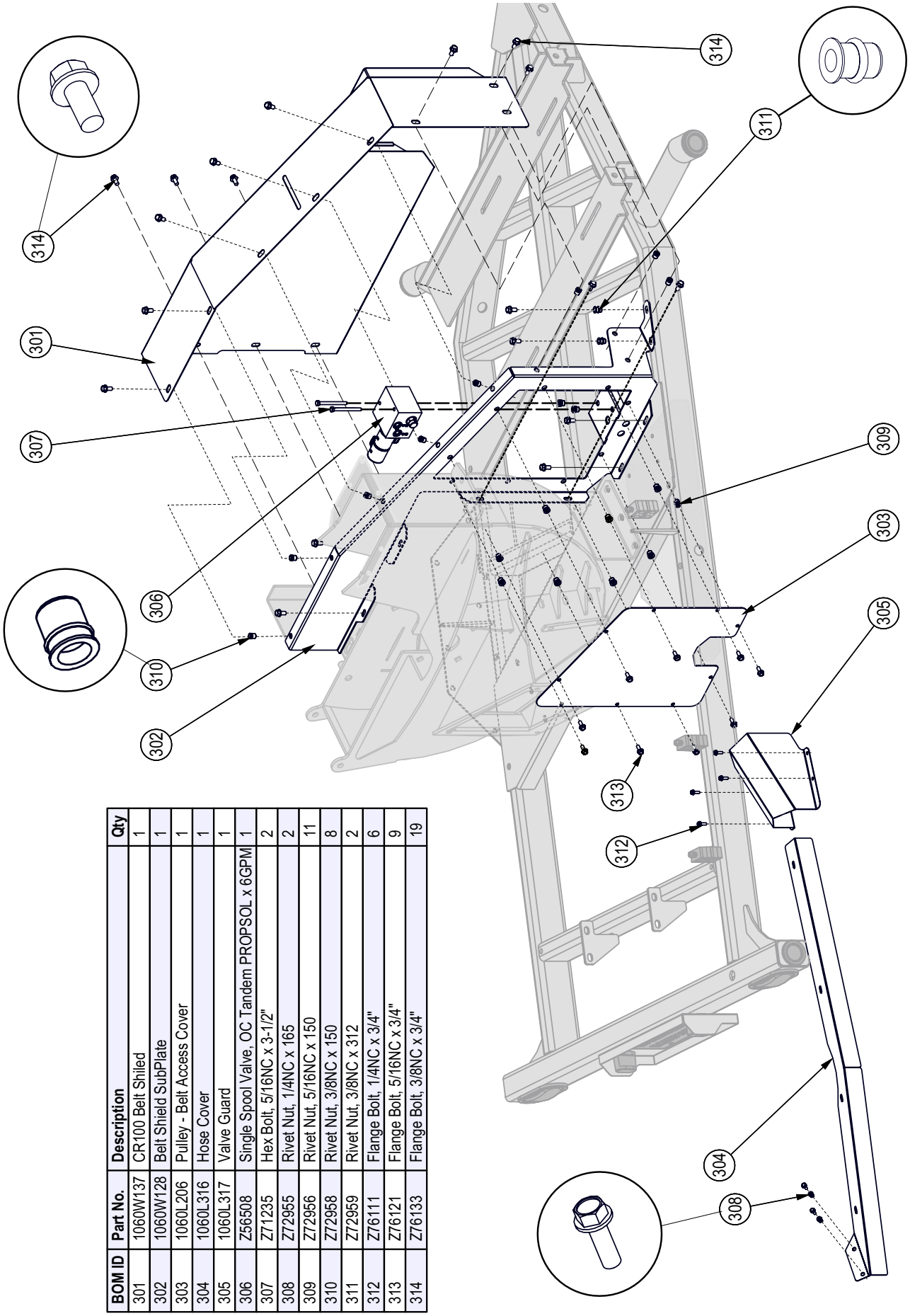

BOM ID	Part No.	Description	Qty
301	1060W137	CR100 Belt Shiled	1
302	1060W128	Belt Shield SubPlate	1
303	1060L206	Pulley - Belt Access Cover	1
304	1060L316	Hose Cover	1
305	1060L317	Valve Guard	1
306	Z56508	Single Spool Valve, OC Tandem PROPSOL x 6GPM	1
307	Z71235	Hex Bolt, 5/16NC x 3-1/2"	2
308	Z72955	Rivet Nut, 1/4NC x 165	2
309	Z72956	Rivet Nut, 5/16NC x 150	11
310	Z72958	Rivet Nut, 3/8NC x 150	8
311	Z72959	Rivet Nut, 3/8NC x 312	2
312	Z76111	Flange Bolt, 1/4NC x 3/4"	6
313	Z76121	Flange Bolt, 5/16NC x 3/4"	9
314	Z76133	Flange Bolt, 3/8NC x 3/4"	19

Hopper Top / Back View

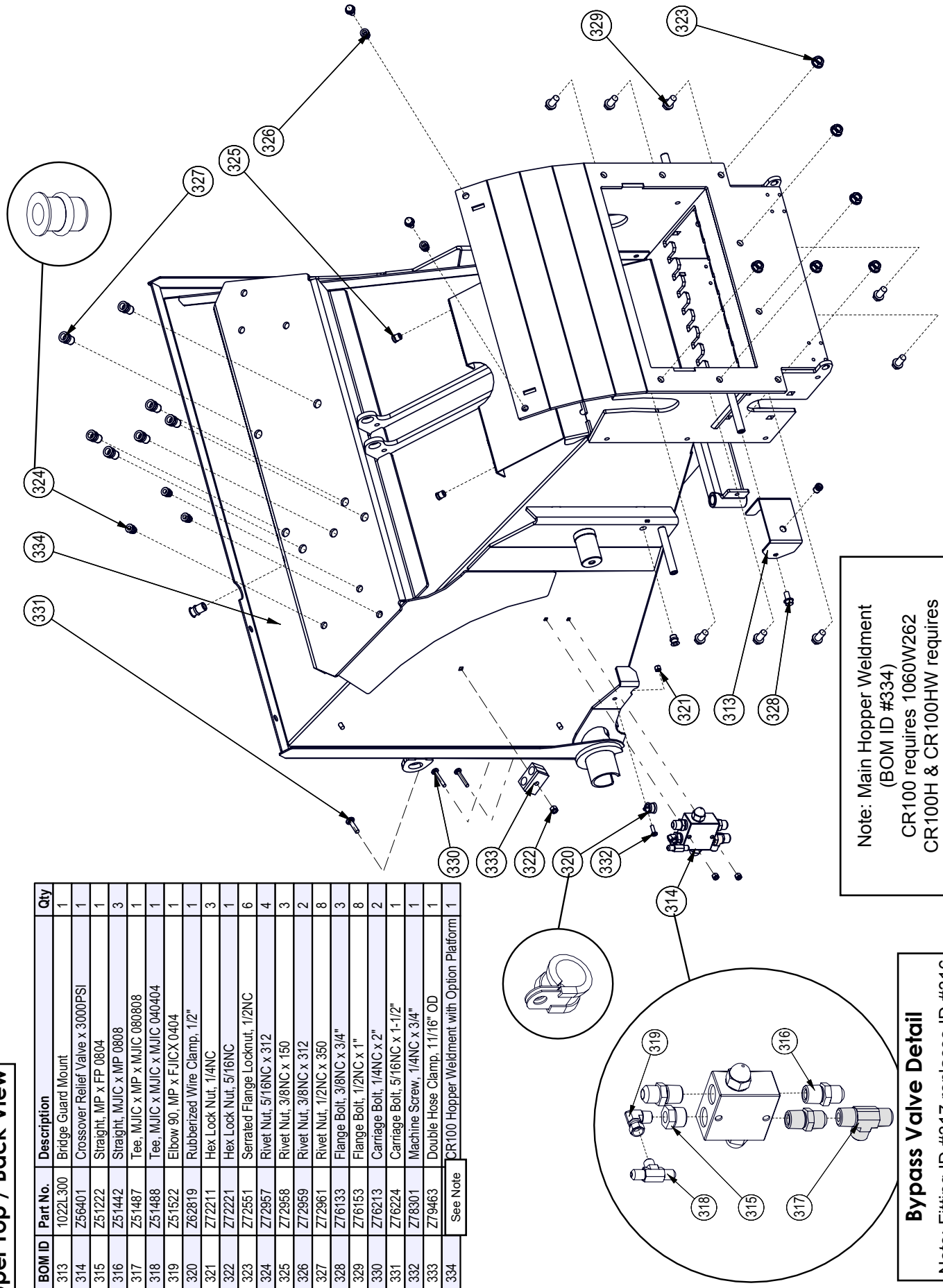

BOM ID	Part No.	Description	Qty
313	1022L300	Bridge Guard Mount	1
314	Z56401	Crossover Relief Valve x 3000PSI	1
315	Z51222	Straight, MP x FP 0804	1
316	Z51442	Straight, MJIC x MP 0808	3
317	Z51487	Tee, MJIC x MP x MJIC 080808	1
318	Z51488	Tee, MJIC x MJIC x MJIC 040404	1
319	Z51522	Elbow 90, MP x FJICX 0404	1
320	Z62819	Rubberized Wire Clamp, 1/2"	1
321	Z72211	Hex Lock Nut, 1/4NC	3
322	Z72221	Hex Lock Nut, 5/16NC	1
323	Z72551	Serrated Flange Locknut, 1/2NC	6
324	Z72957	Rivet Nut, 5/16NC x 312	4
325	Z72958	Rivet Nut, 3/8NC x 150	3
326	Z72959	Rivet Nut, 3/8NC x 312	2
327	Z72961	Rivet Nut, 1/2NC x 350	8
328	Z76133	Flange Bolt, 3/8NC x 3/4"	3
329	Z76153	Flange Bolt, 1/2NC x 1"	8
330	Z76213	Carriage Bolt, 1/4NC x 2"	2
331	Z76224	Carriage Bolt, 5/16NC x 1-1/2"	1
332	Z78301	Machine Screw, 1/4NC x 3/4"	1
333	Z79463	Double Hose Clamp, 11/16" OD	1
334	See Note	CR100 Hopper Weldment with Option Platform	1

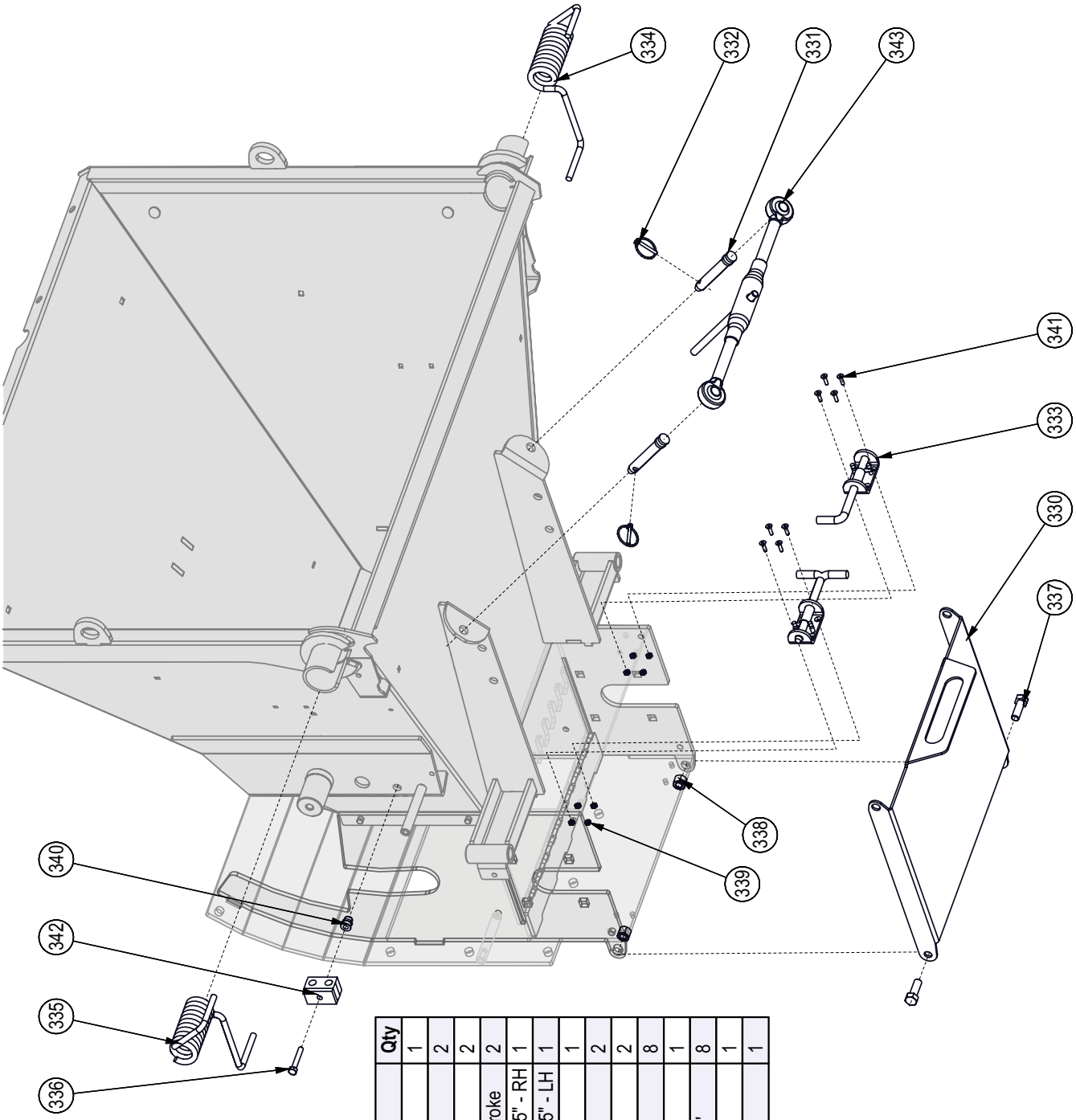

Hopper Front/ Bottom View

BOM ID	Part No.	Description	Qty
330	1060L139	Clean-out Tray, CR100	1
331	Z11111	Toplink Pin, 5/8" x 2-3/4"	2
332	Z12110	Lynch Pin, 3/16"	2
333	Z18207	Spring Latch Pin, 1/2" x 1" Stroke	2
334	Z33301	Tor Spring, 2" OD x 5" x 0.375" - RH	1
335	Z33302	Tor Spring, 2" OD x 5" x 0.375" - LH	1
336	Z71220	Hex Bolt, 5/16NC x 2"	1
337	Z71515	Hex Bolt, 1/2NC x 1-1/2"	2
338	Z72251	Hex Lock Nut, 1/2NC	2
339	Z72204	Hex Lock Nut, #10NF	8
340	Z72957	Rivet Nut, 5/16NC x 312	1
341	Z78316	Machine Screw, #10NF x 3/4"	8
342	Z79462	Double Hose Clamp, 1/2" OD	1
343	Z11501	Toplink, Cat 0 x 10-1/2" x 16"	1

Upper Roller

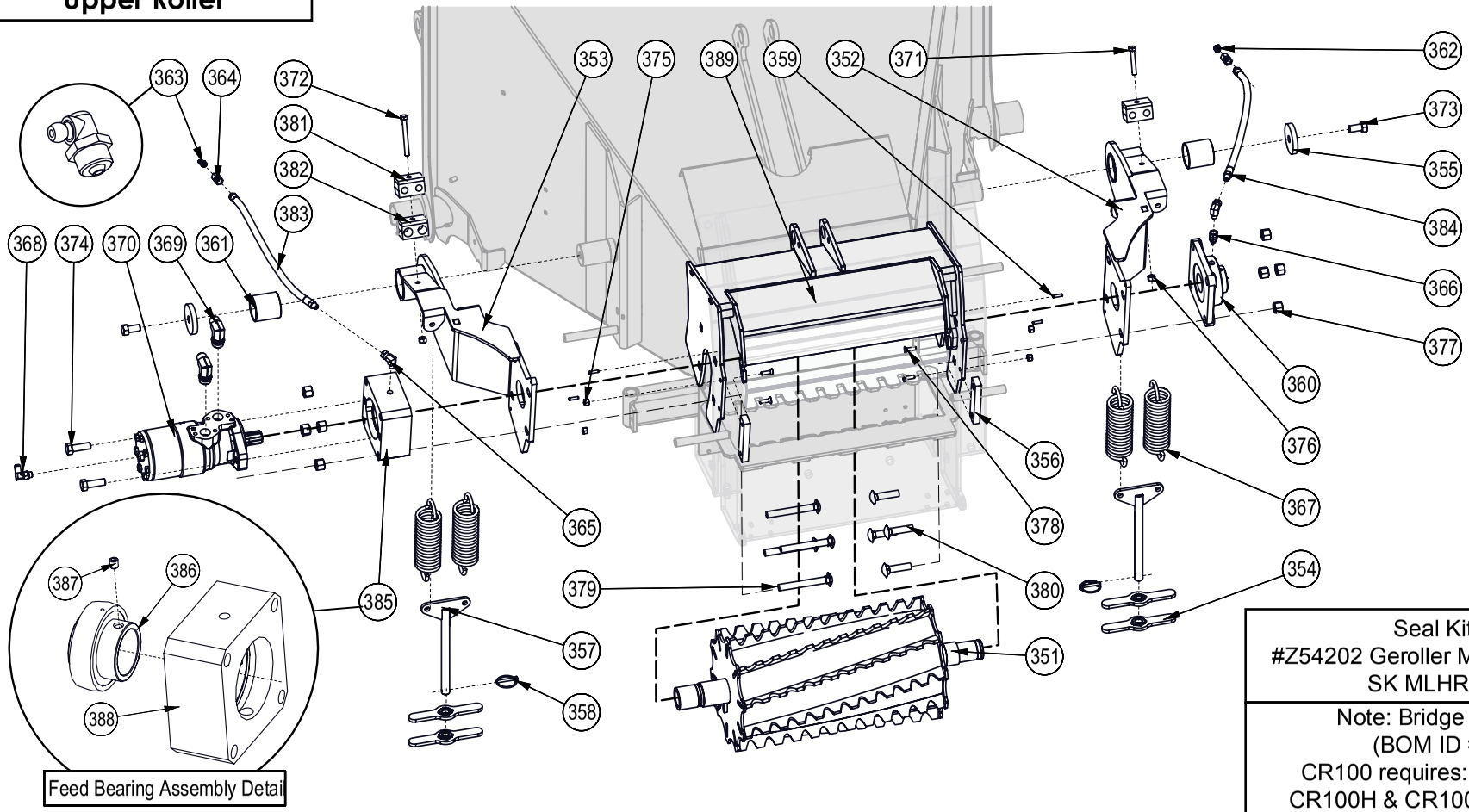

Seal Kit for
#Z54202 Geroller Motor, 400C4UE
SK MLHR-U/D,E

Note: Bridge Weldment
(BOM ID #389)
CR100 requires: **#1060W307**
CR100H & CR100HW requires:
#1060W308

BOM ID	Part No.	Description	Qty
351	1060W311	Upper Feed Roller, Spiral	1
352	1060W303	Weldment, Roller Pivot Arm LH	1
353	1060W303H	CR100 Roller Pivot Arm RH	1
354	1022W220	Nut Handle	4
355	1015L618	Capture Washer	2
356	1022S208	Rotor Hood Slide	2
357	1022W206	Spring Yoke	2
358	Z12110	Lynch Pin, 3/16"	2
359	Z14152	Roll Pin, 3/16" x 3/4"	4
360	Z25204	4-Bolt Flange Bearing, UCF208-24	1
361	Z27101	Fiberglide Bearing, 1-3/4" ID x 2" long x 1/8" wall	2
362	Z29204	Elbow 45 Grease Fitting, MP02	1
363	Z29207	Elbow 90 Grease Fitting, MP02	1
364	Z29302	Grease Fitting, FP x FPX 0202	2

BOM ID	Part No.	Description	Qty
365	Z29307	Elbow 90 Grease Fitting, MP x FPX 0202	2
366	Z29311	Grease Fitting, MP x FPX 0202	1
367	Z31501	Ext Spring, 2" OD x 7" x 0.250"	4
368	Z51657	Elbow 90, MJIC x MORB 0404	1
369	Z51658	Elbow 90, MJIC x MORB 0810	2
370	Z54203	Geroller Motor, 400CCR x 6B Spline	1
371	Z71220	Hex Bolt, 5/16NC x 2"	1
372	Z71230	Hex Bolt, 5/16NC x 3"	1
373	Z71510	Hex Bolt, 1/2NC x 1"	2
374	Z71515	Hex Bolt, 1/2NC x 1-1/2"	2
375	Z72211	Hex Lock Nut, 1/4NC	4
376	Z72221	Hex Lock Nut, 5/16NC	2
377	Z72251	Hex Lock Nut, 1/2NC	8
378	Z75211	FHCS, 1/4NC x 7/8"	4

BOM ID	Part No.	Description	Qty
379	Z762511	Carriage Bolt, 1/2NC x 4"	4
380	Z76255	Carriage Bolt, 1/2NC x 2"	4
381	Z79462	Double Hose Clamp, 1/2" OD	2
382	Z79463	Double Hose Clamp, 11/16" OD	1
383	Z29312	1/4" Grease Whip, MP02 x MP02 x 13"	1
384	Z92312	1/4" Grease Whip, MP02 x MP02 x 13"	1
385	1022A205	Feed Bearing Assembly	1
386	Z21903	Ball Bearing, UC209-28 x Insert	1
387	Z74122	Set Screw, 5/16NF x 3/8"	1
388	1022M218	UC Motor Bearing Housing	1
389	1060W307	Bridge, Guarded - CR100	1
	1060W308	Hydraulic Lift Bridge, Guarded - CR100H & CR100HW	1

Lower Roller

BOM ID	Part #	Description	Qty
382	1022M218	UC Motor Bearing Housing	1
383	1022W205	Lower Feed Roll	1
384	Z21903	Ball Bearing Insert 1-3/4"	1
385	Z25204	4-Bolt Bearing 1-1/2" Bore	1
386	Z29204	Grease Fitting, 1/8NPT x 45	1
387	Z29207	Grease Zerk, MP02 x 90	1
388	Z29302	Straight, FP x FPX 0202	2
389	Z29307	Elbow 90 MP x FPX 0202	2
390	Z29311	Straight, MP x FPX 0202	1
391	Z29313b	1/4" Grease Whip, MP02 x MP02 x 16"	1
392	Z46594	Blind Chipper Key 1/4 x 1-1/4	1
393	Z51657	Elbow 90, MORB x MJIC 0404	1
394	Z51658	Elbow 90 MJIC x MORB 0810	2
395	Z54201	Geroller Motor, 315C4UE	1
396	Z71230	Hex Bolt, 5/16NC x 3	1
397	Z71515	Hex Bolt, 1/2NC x 1-1/2	2
398	Z72251	Hex Lock Nut, 1/2NC	8
399	Z74122	Set Screw, 5/16NF	1
400	Z762510	Carriage Bolt, 1/2NC x 3-1/2	4
401	Z76258	Carriage Bolt, 1/2NC x 1-3/4	4
402	Z79462	Double Hose Clamp 1/2"	1
403	Z79463	Double Hose Clamp 11/16"	1
404	Z92313b	1/4" Grease Whip, MP02 x MP02 x 16"	1

Seal Kit for
#Z54201 Geroller Motor, 315C4UE
SK MLHR-U/D,E

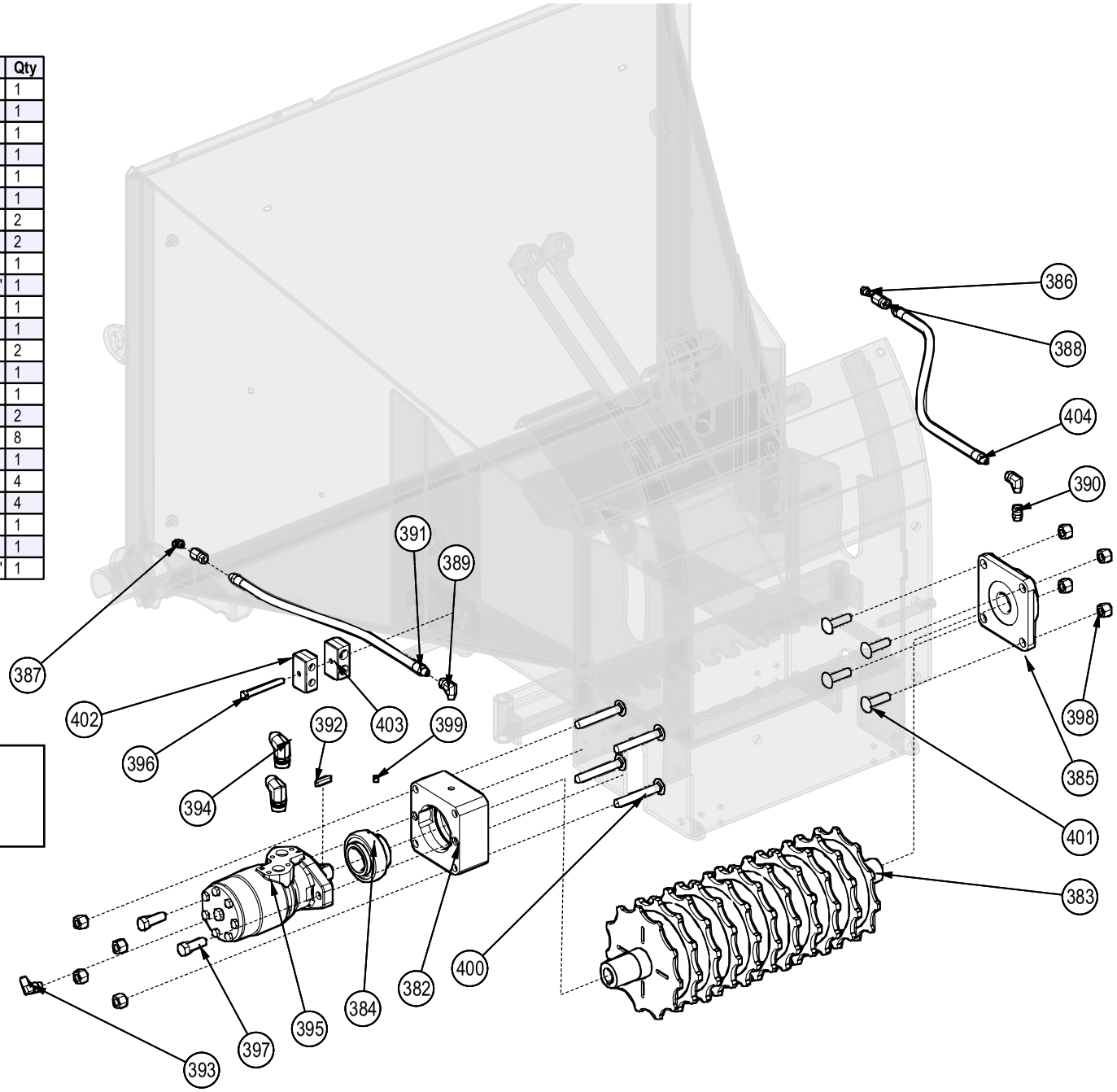

Hopper Roller Shrouding

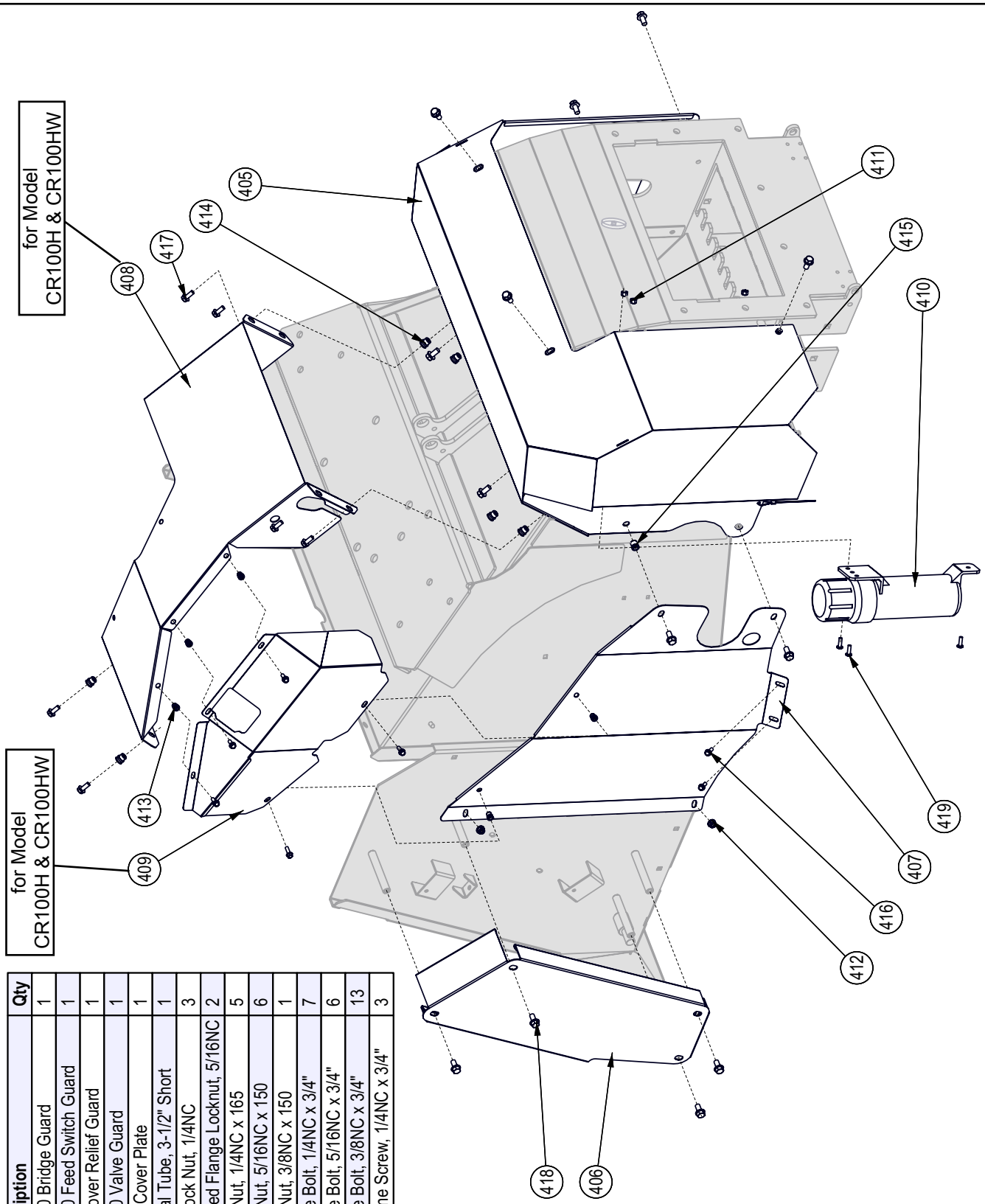

BOM ID	Part No.	Description	Qty
405	1060W122	CR100 Bridge Guard	1
406	1060L302	CR100 Feed Switch Guard	1
407	1060L318	Crossover Relief Guard	1
408	1083L107	CR100 Valve Guard	1
409	1083L110	Valve Cover Plate	1
410	Z96503	Manual Tube, 3-1/2" Short	1
411	Z72211	Hex Lock Nut, 1/4NC	3
412	Z72521	Serrated Flange Locknut, 5/16NC	2
413	Z72955	Rivet Nut, 1/4NC x 165	5
414	Z72956	Rivet Nut, 5/16NC x 150	6
415	Z72958	Rivet Nut, 3/8NC x 150	1
416	Z76111	Flange Bolt, 1/4NC x 3/4"	7
417	Z76121	Flange Bolt, 5/16NC x 3/4"	6
418	Z76133	Flange Bolt, 3/8NC x 3/4"	13
419	Z78301	Machine Screw, 1/4NC x 3/4"	3

Feed Table

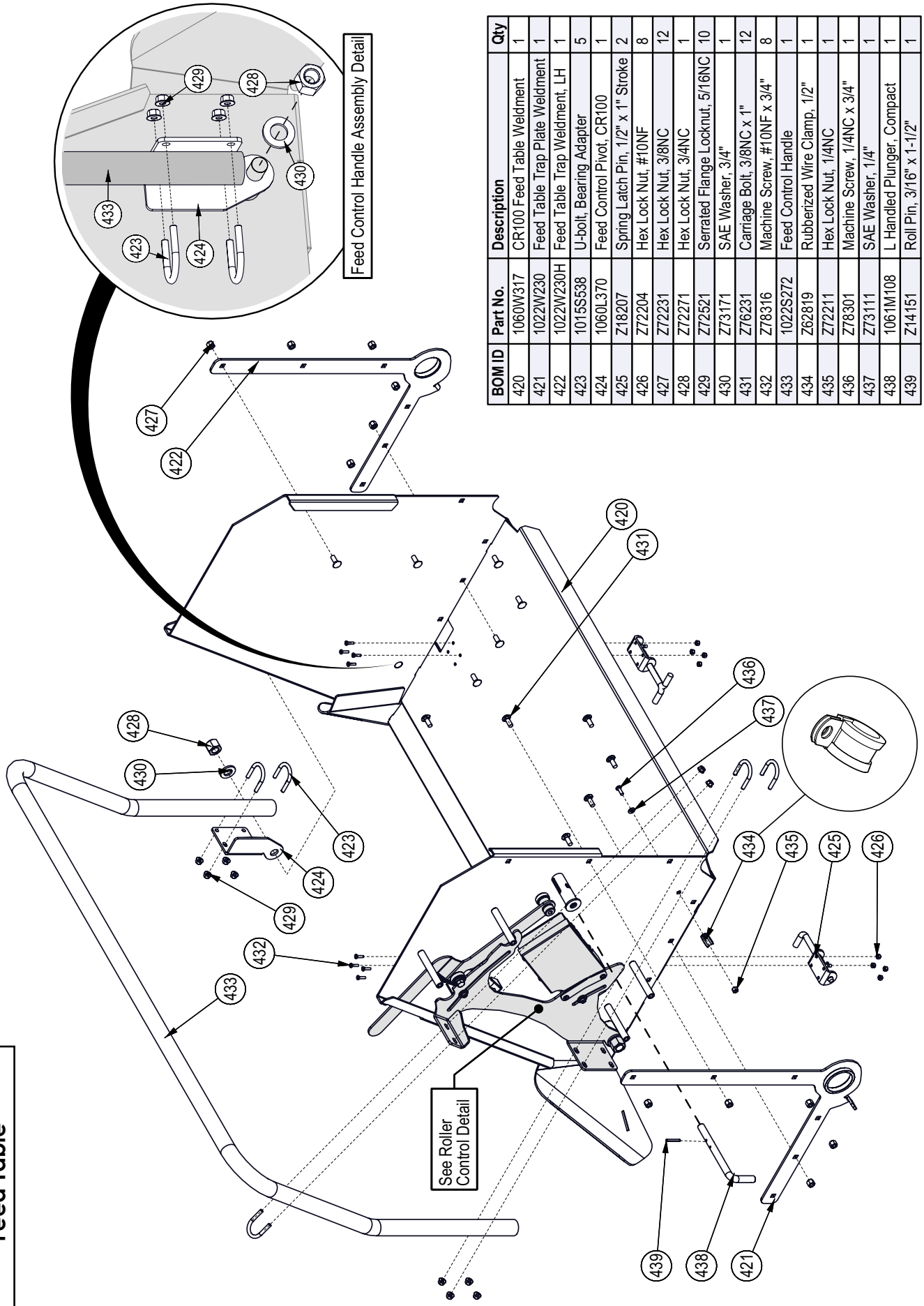

BOM ID	Part No.	Description	Qty
420	1060W317	CR100 Feed Table Weldment	1
421	1022W230	Feed Table Trap Plate Weldment	1
422	1022W230H	Feed Table Trap Weldment, LH	1
423	1015S538	U-bolt, Bearing Adapter	5
424	1060L370	Feed Control Pivot, CR100	1
425	Z18207	Spring Latch Pin, 1/2" x 1" Stroke	2
426	Z72204	Hex Lock Nut, #10NF	8
427	Z72231	Hex Lock Nut, 3/8NC	12
428	Z72271	Hex Lock Nut, 3/4NC	1
429	Z72521	Serrated Flange Locknut, 5/16NC	10
430	Z73171	SAE Washer, 3/4"	1
431	Z76231	Carriage Bolt, 3/8NC x 1"	12
432	Z78316	Machine Screw, #10NF x 3/4"	8
433	1022S272	Feed Control Handle	1
434	Z62819	Rubberized Wire Clamp, 1/2"	1
435	Z72211	Hex Lock Nut, 1/4NC	1
436	Z78301	Machine Screw, 1/4NC x 3/4"	1
437	Z73111	SAE Washer, 1/4"	1
438	1061M108	L Handled Plunger, Compact	1
439	Z14151	Roll Pin, 3/16" x 1-1/2"	1

Feed Roller Control Detail

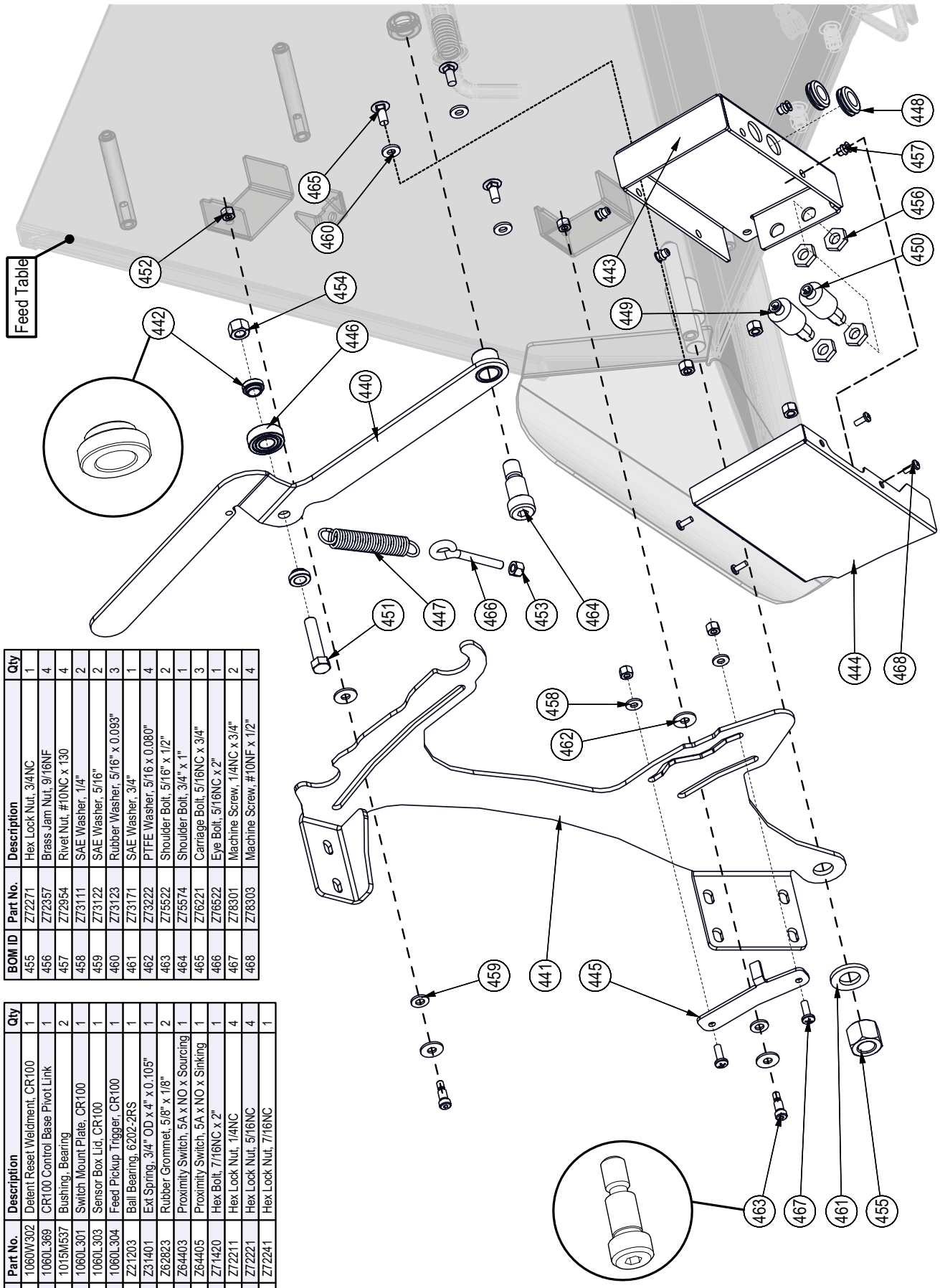

BOM ID	Part No.	Description	Qty
440	1060W302	Detent Reset Weldment, CR100	1
441	1060L369	CR100 Control Base Pivot Link	1
442	1015M537	Bushing, Bearing	2
443	1060L301	Switch Mount Plate, CR100	1
444	1060L303	Sensor Box Lid, CR100	1
445	1060L304	Feed Pickup Trigger, CR100	1
446	Z21203	Ball Bearing, 6202-2RS	1
447	Z31401	Ext Spring, 3/4" OD x 4" x 0.105"	1
448	Z62823	Rubber Grommet, 5/8" x 1/8"	2
449	Z64403	Proximity Switch, 5A x NO x Sourcing	1
450	Z64405	Proximity Switch, 5A x NO x Sinking	1
451	Z71420	Hex Bolt, 7/16NC x 2"	1
452	Z72211	Hex Lock Nut, 1/4NC	4
453	Z72221	Hex Lock Nut, 5/16NC	4
454	Z72241	Hex Lock Nut, 7/16NC	1

BOM ID	Part No.	Description	Qty
455	Z72271	Hex Lock Nut, 3/4NC	1
456	Z72357	Brass Jam Nut, 9/16NF	4
457	Z72954	Rivet Nut, #10NC x 130	4
458	Z73111	SAE Washer, 1/4"	2
459	Z73122	SAE Washer, 5/16"	2
460	Z73123	Rubber Washer, 5/16" x 0.093"	3
461	Z73171	SAE Washer, 3/4"	1
462	Z73222	PTFE Washer, 5/16 x 0.080"	4
463	Z75522	Shoulder Bolt, 5/16" x 1/2"	2
464	Z75574	Shoulder Bolt, 3/4" x 1"	1
465	Z76221	Carriage Bolt, 5/16NC x 3/4"	3
466	Z76522	Eye Bolt, 5/16NC x 2"	1
467	Z78301	Machine Screw, 1/4NC x 3/4"	2
468	Z78303	Machine Screw, #10NF x 1/2"	4

Winch

for Model
CR100HW

Seal Kit for
#Z54108 Hydraulic Motor
MLHP 50
SK MLHP-U/D,E

IMPORTANT; When ordering winch gears, please order in sets: This will insure gears are correctly matched.

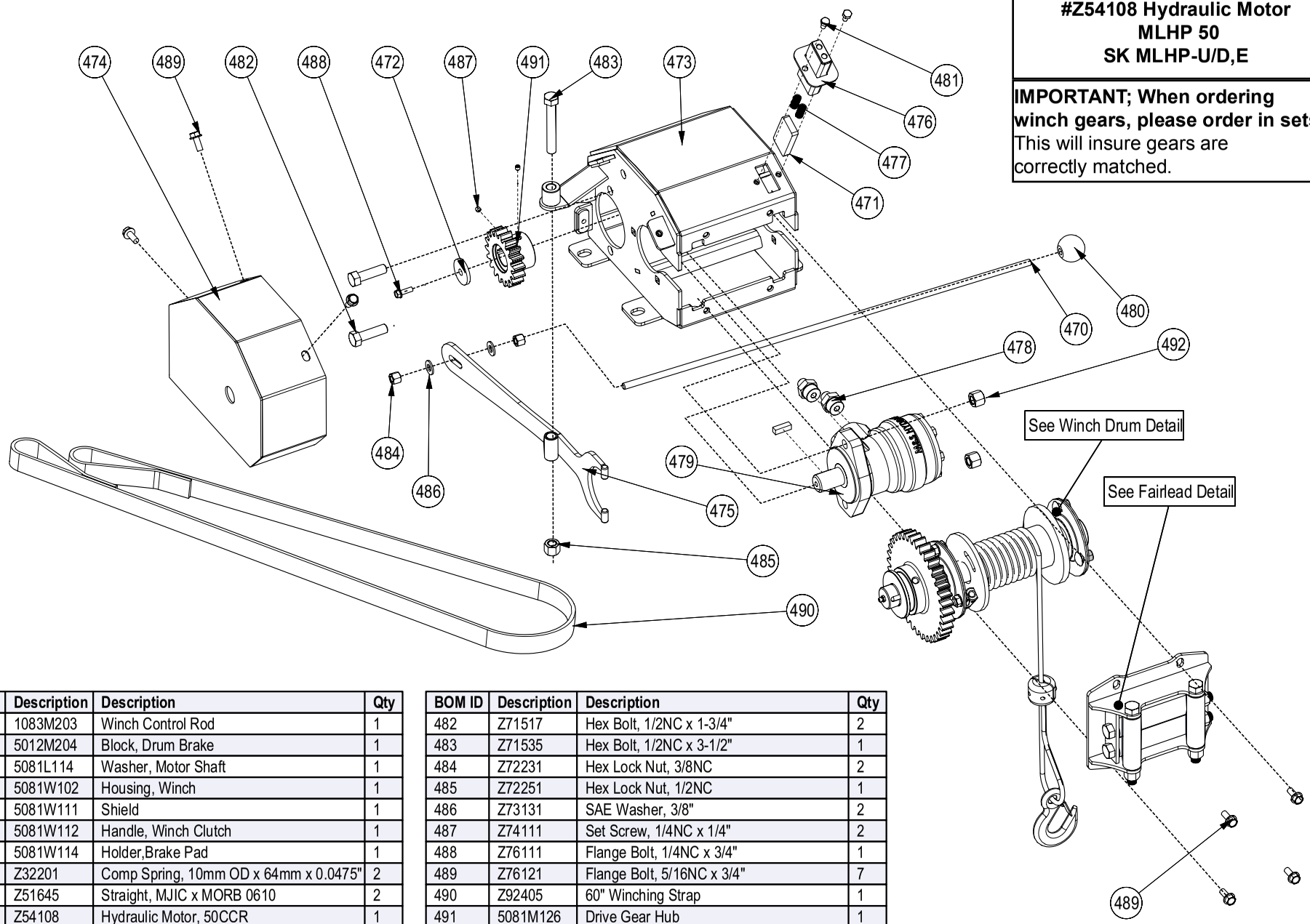

BOM ID	Description	Description	Qty
470	1083M203	Winch Control Rod	1
471	5012M204	Block, Drum Brake	1
472	5081L114	Washer, Motor Shaft	1
473	5081W102	Housing, Winch	1
474	5081W111	Shield	1
475	5081W112	Handle, Winch Clutch	1
476	5081W114	Holder,Brake Pad	1
477	Z32201	Comp Spring, 10mm OD x 64mm x 0.0475"	2
478	Z51645	Straight, MJIC x MORB 0610	2
479	Z54108	Hydraulic Motor, 50CCR	1
480	Z56914	Handle Kit, Knob	1
481	Z71105	Hex Bolt, 1/4NC x 1/2"	2

BOM ID	Description	Description	Qty
482	Z71517	Hex Bolt, 1/2NC x 1-3/4"	2
483	Z71535	Hex Bolt, 1/2NC x 3-1/2"	1
484	Z72231	Hex Lock Nut, 3/8NC	2
485	Z72251	Hex Lock Nut, 1/2NC	1
486	Z73131	SAE Washer, 3/8"	2
487	Z74111	Set Screw, 1/4NC x 1/4"	2
488	Z76111	Flange Bolt, 1/4NC x 3/4"	1
489	Z76121	Flange Bolt, 5/16NC x 3/4"	7
490	Z92405	60" Winching Strap	1
491	5081M126	Drive Gear Hub	1
492	Z72551	Serrated Flange LockNut, 1/2NC	2

Winch Drum Detail

for Model
CR100HW

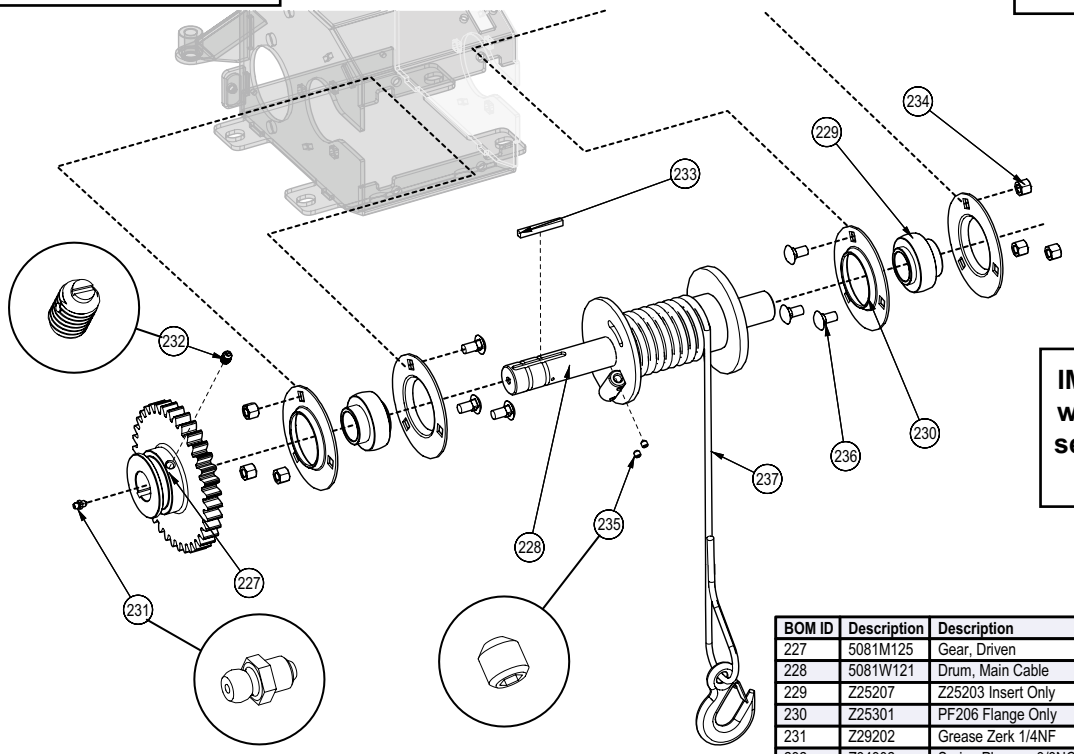

IMPORTANT; When ordering winch gears, please order in sets: This will insure gears are correctly matched.

BOM ID	Description	Description	Qty
227	5081M125	Gear, Driven	1
228	5081W121	Drum, Main Cable	1
229	Z25207	Z25203 Insert Only	2
230	Z25301	PF206 Flange Only	4
231	Z29202	Grease Zerk 1/4NF	1
232	Z34302	Spring Plunger, 3/8NC x 5/8" x 21 lbs	1
233	Z46531	Key, 1/4 x 1/4 x 2	1
234	Z72231	Hex Lock Nut, 3/8NC	6
235	Z74113	Set Screw, 1/4NC x 1/2"	2
236	Z76233	Carriage Bolt, 3/8NC x 3/4"	6
237	Z92112	Synthetic Winch Rope 1/4 x 50' with Hook	1

Winch Arm Ass'y

for Model
CR100HW

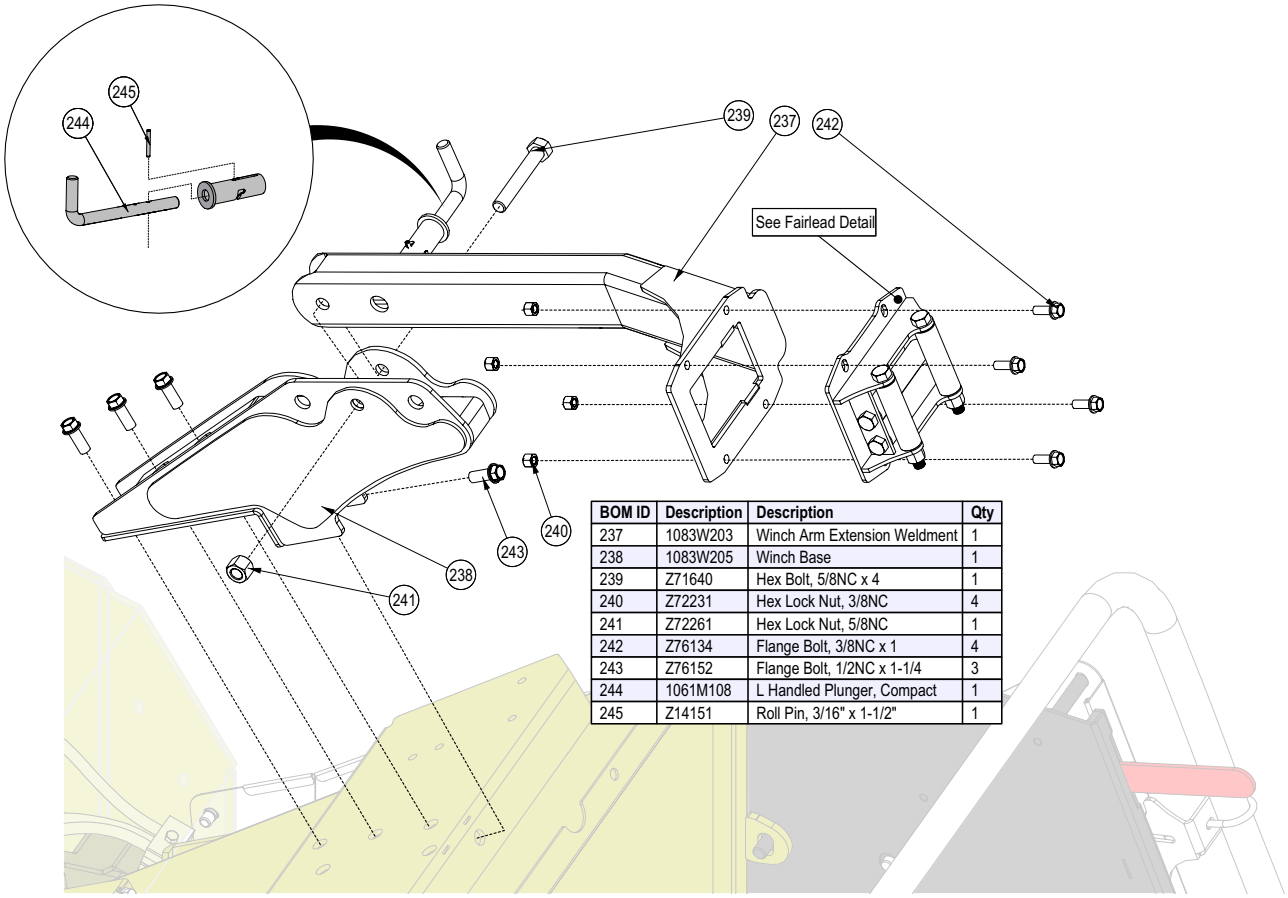

BOM ID	Description	Description	Qty
237	1083W203	Winch Arm Extension Weldment	1
238	1083W205	Winch Base	1
239	Z71640	Hex Bolt, 5/8NC x 4	1
240	Z72231	Hex Lock Nut, 3/8NC	4
241	Z72261	Hex Lock Nut, 5/8NC	1
242	Z76134	Flange Bolt, 3/8NC x 1	4
243	Z76152	Flange Bolt, 1/2NC x 1-1/4	3
244	1061M108	L Handled Plunger, Compact	1
245	Z14151	Roll Pin, 3/16" x 1-1/2"	1

Fairlead Ass'y Detail

for Model
CR100HW

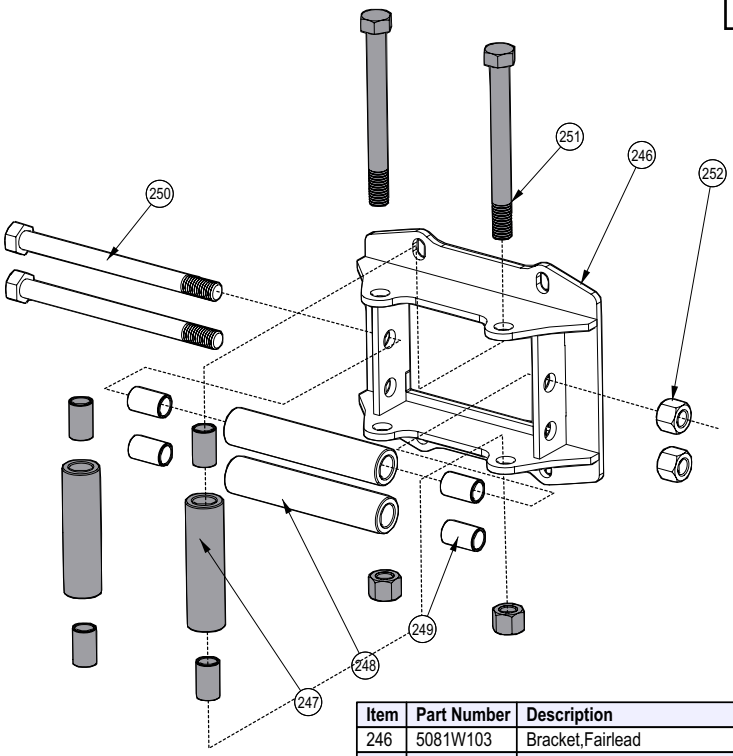

Item	Part Number	Description	Qty
246	5081W103	Bracket,Fairlead	1
247	5081M109	Bushing, Fairlead Side	2
248	5081M111	Bushing, Fairlead Top	2
249	Z27103	Fiberglide Bearing 1/2" x 1"	8
250	Z71566	Hex Bolt, 1/2NC x 6-1/4, 5-1/4 Shank	2
251	Z71567	Hex Bolt, 1/2NC x 5, 4" Shank	2
252	Z72251	Hex Lock Nut, 1/2NC	4

Roller Lift Hydraulic Cylinder

for Model
CR100H & CR100HW

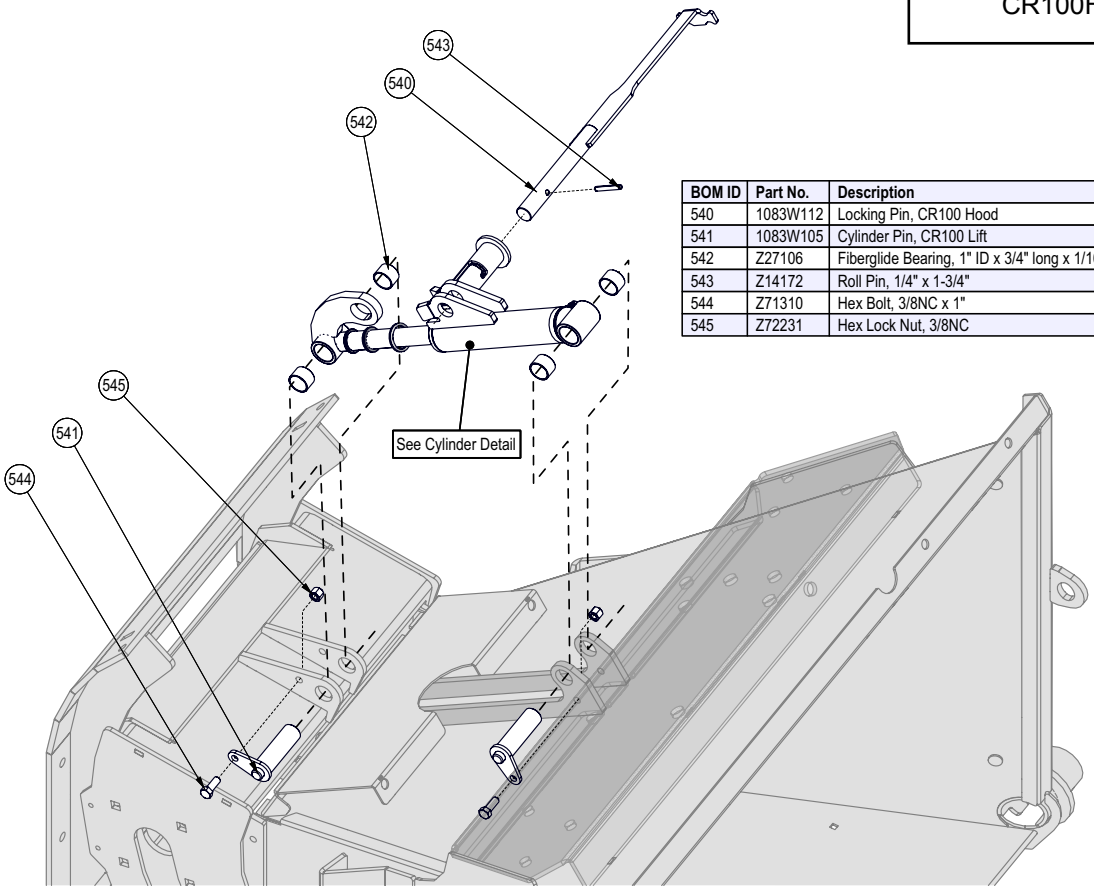

BOM ID	Part No.	Description	Qty
540	1083W112	Locking Pin, CR100 Hood	1
541	1083W105	Cylinder Pin, CR100 Lift	2
542	Z27106	Fiberglide Bearing, 1" ID x 3/4" long x 1/16" Wall	4
543	Z14172	Roll Pin, 1/4" x 1-3/4"	1
544	Z71310	Hex Bolt, 3/8NC x 1"	2
545	Z72231	Hex Lock Nut, 3/8NC	2

Cylinder Seal Installation

for Model
CR100H & CR100HW

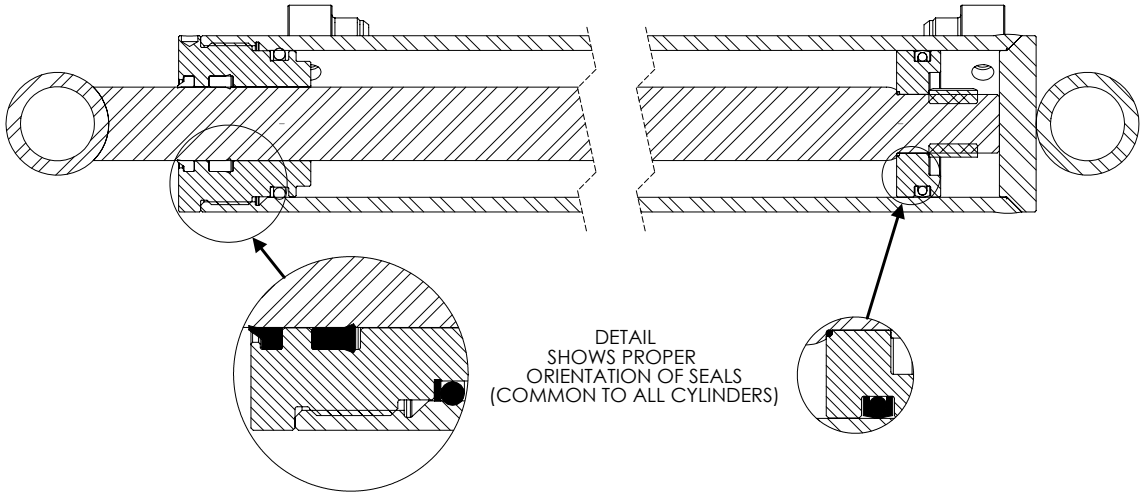

Roller Lift Hydraulic Cylinder Detail

for Model
CR100H & CR100HW

Seal Kit #SLK-1510AN

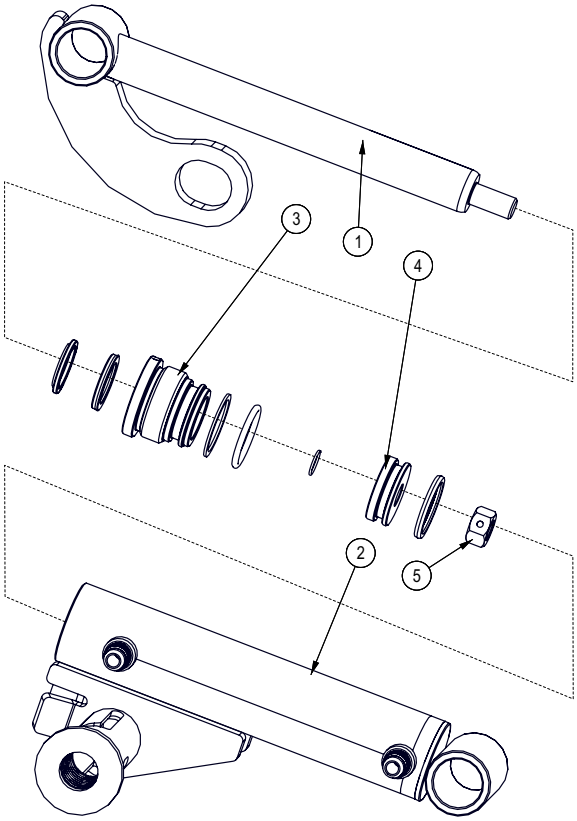

BOM ID	Part No.	Description	Qty
1	1083C1063	Rod, 1x3/4	1
2	1083C1064	Barrel, 1-1/2" Bore	1
3	G150-100S	Gland, 1-1/2" x 1"	1
4	P500-150SP	Piston, 1-1/2" Bore	1
5	Z72254	Hex CTR-lock Nut, 1/2NF	1

Intellifeed Manifold Ass'y

for Model
CR100H & CR100HW

BOM ID	Part #	Description	Qty
545	Z51498	Straight, FJIC x MJIC 0812	1
546	Z51643	#8ORB x #8JIC	1
547	Z51649	Straight, MJIC x MORB 0806	2
548	Z51673	Tee, MJIC x MORB x MJIC 080808	1
549	Z56508	CR IntelliFEED Manifold 6gpm	1
550	Z71235	Hex Bolt, 5/16NC x 3-1/2	2

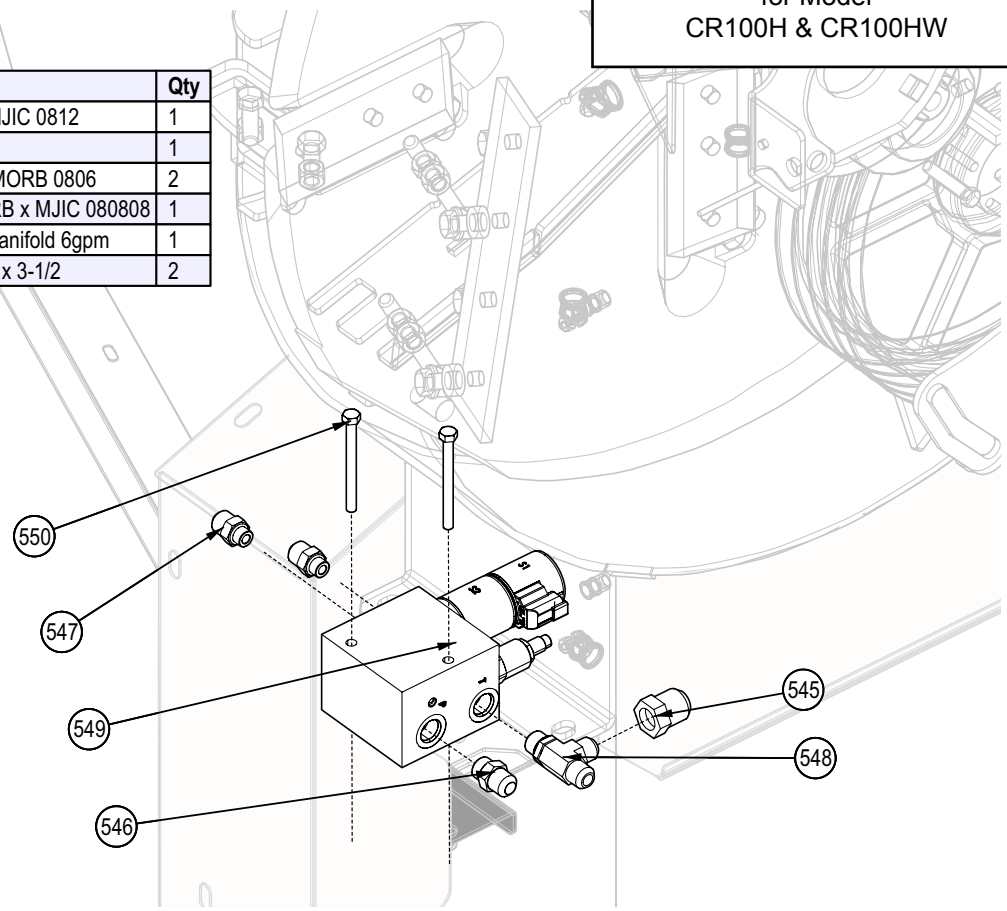

Winch and Roller Lift Hydraulic Controls

for Model
CR100H & CR100HW

Seal and Replacement Kits

1x SK SD5/1	Complete seal kit for your part #Z56216)
1x SK SD5/2	Complete seal kit for your part #Z56219)
1x L5(M8)	Lever box

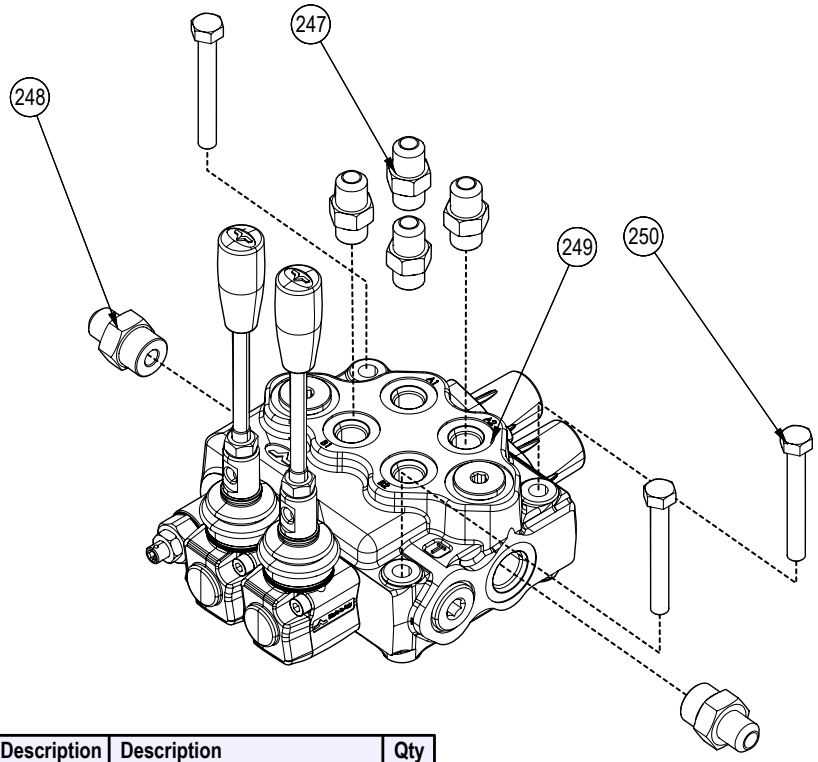

BOM ID	Description	Description	Qty
247	Z51641	#6ORB x #6JIC	4
248	Z51644	Straight, MJIC x MORB 0608	2
249	Z56218	Two Spool Valve, VC x 12GPM	1
250	Z71225	Hex Bolt, 5/16NC x 2-1/2"	3

Intellifeed Wiring Harness & Lights and Brakes Wiring Harness

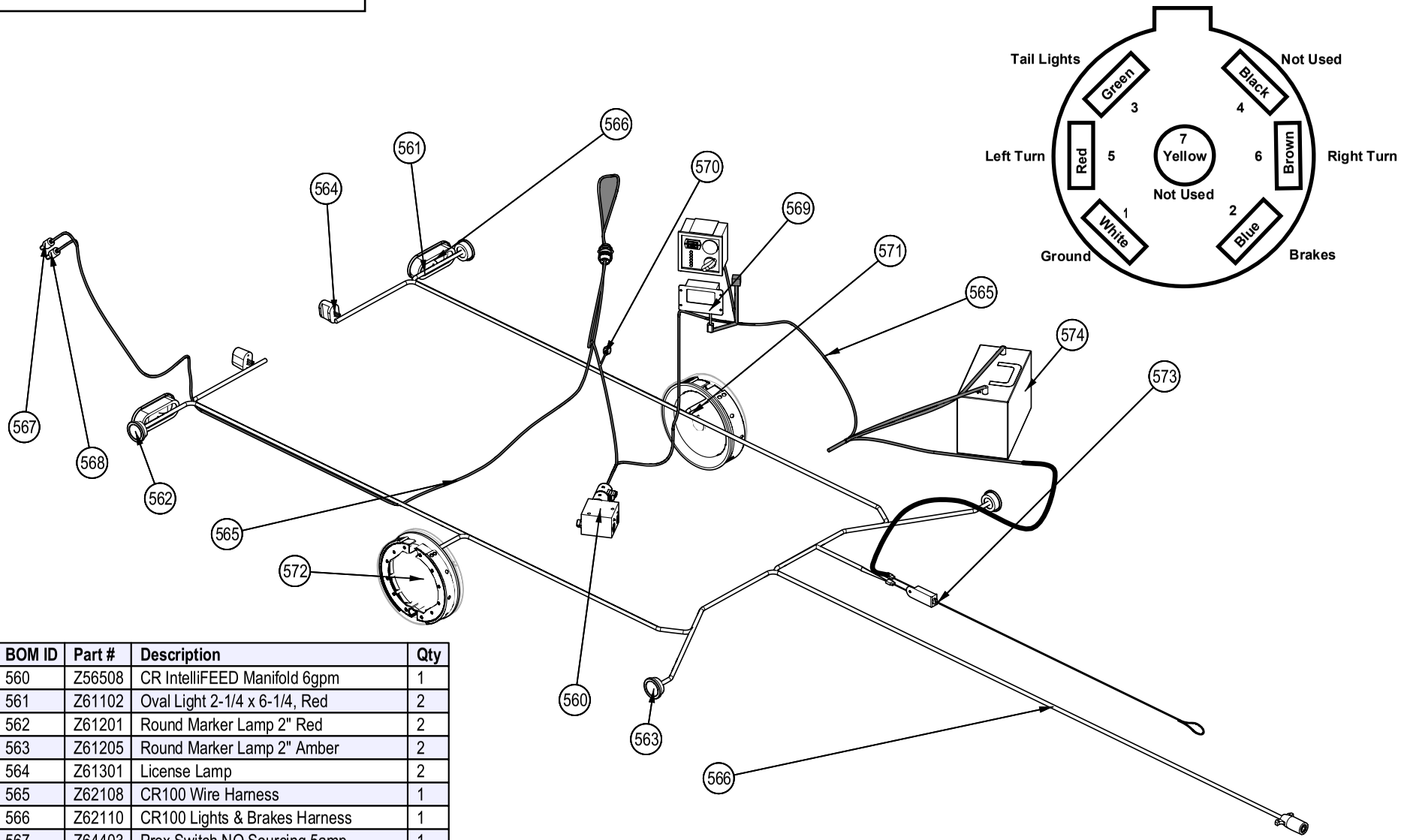

BOM ID	Part #	Description	Qty
560	Z56508	CR IntelliFEED Manifold 6gpm	1
561	Z61102	Oval Light 2-1/4 x 6-1/4, Red	2
562	Z61201	Round Marker Lamp 2" Red	2
563	Z61205	Round Marker Lamp 2" Amber	2
564	Z61301	License Lamp	2
565	Z62108	CR100 Wire Harness	1
566	Z62110	CR100 Lights & Brakes Harness	1
567	Z64403	Prox Switch NO Sourcing 5amp	1
568	Z64405	Prox Switch NO Sinking 5amp	1
569	Z66204	Control, IntelliFEED	1
570	Z66210	IntelliFEED Pickup Sensor with 68" Lead	1
571	Z91702	Electric Brake, 2x12 LH	1
572	Z91712	Electric Brake, 2x12 RH	1
573	Z91713	Breakaway Safety Switch	1
574	Z93217	Battery 31A-950	1

Light Bulb Replacement		
Part #	Description	replacement
Z61201	Round Marker Lamp 2" Red	replace unit
Z61205	Round Marker Lamp 2" Amber	replace unit
Z61102	Oval Light 2-1/4 x 6-1/4, Red	replace unit
Z61301	License Lamp	replacement bulb #67

For threaded parts installation, refer to the torque charts in this manual.

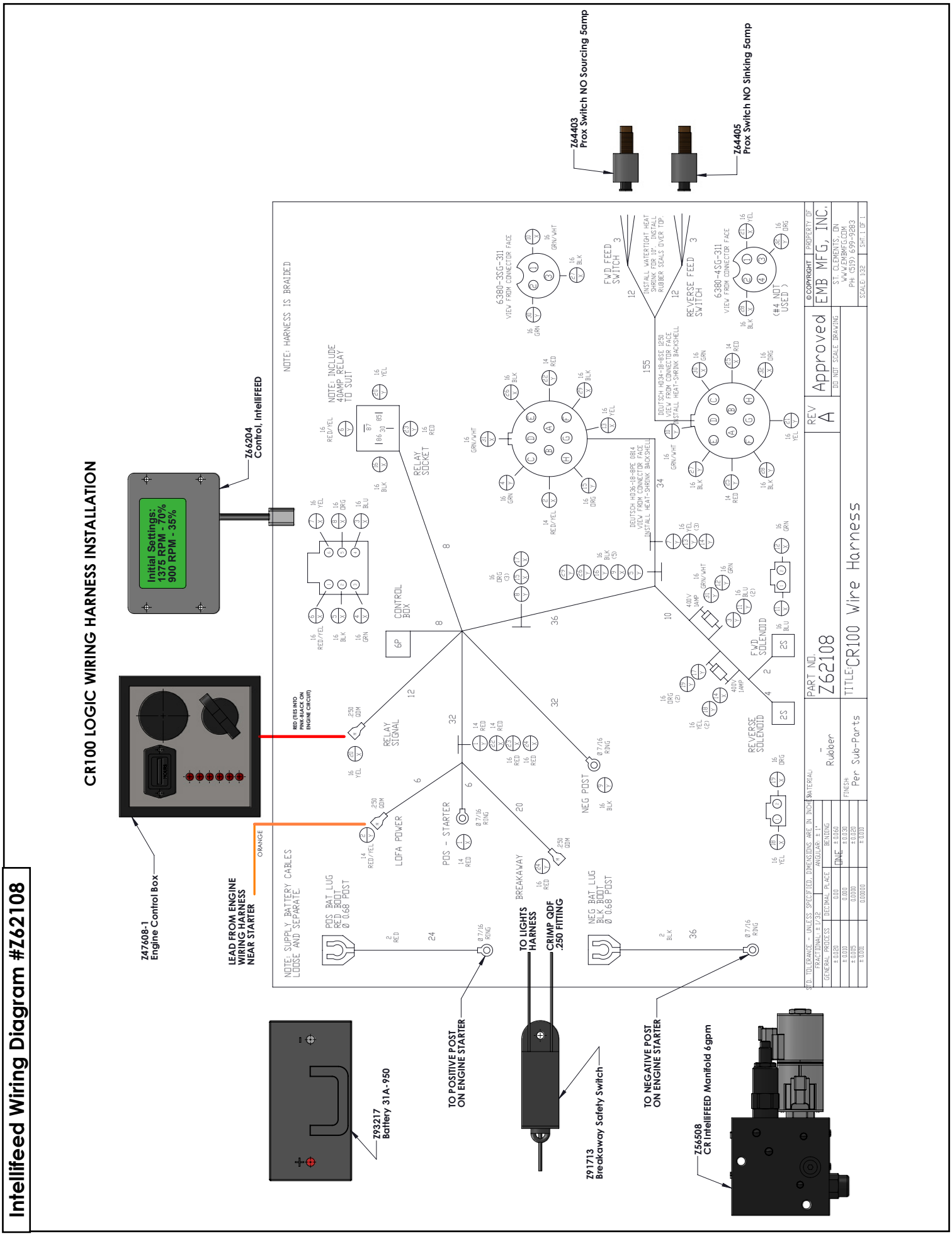
Intellifeed Wiring Diagram #Z62108
CR100 LOGIC WIRING HARNESS INSTALLATION
Z64403
Prox Switch NO Sourcing 5amp
Z64405
Prox Switch NO Sinking 5amp
Z66204
Control, IntelliFEED
Initial Settings:
1375 RPM - 70%
900 RPM - 35%
Z47608-1
Engine Control Box
LEAD FROM ENGINE WIRING HARNESS NEAR STARTER
ORANGE
RED TIES INTO PINK-BLACK ON ENGINE CIRCUIT
NOTE: HARNESS IS BRAIDED
NOTE: INCLUDE 40AMP RELAY TO SUIT
RELAY SOCKET
CONTROL BOX
RELAY SIGNAL
LOFA POWER
POS - STARTER
BREAKAWAY
NEG POST
NOTE: SUPPLY BATTERY CABLES LOOSE AND SEPARATE.
POS BAT LUG RED BOOT Ø 0.68 POST
NEG BAT LUG BLK BOOT Ø 0.68 POST
6380-3SG-311
VIEW FROM CONNECTOR FACE
FWD FEED SWITCH
REVERSE FEED SWITCH
INSTALL WATERTIGHT HEAT SHRINK FOR 10" INSTALL RUBBER SEALS OVER TIP.
DEUTSCH HD34-18-8SE 1250
VIEW FROM CONNECTOR FACE
INSTALL HEAT-SHRINK BACKSHELL
DEUTSCH HD36-18-8PE 0814
VIEW FROM CONNECTOR FACE
INSTALL HEAT-SHRINK BACKSHELL
6380-4SG-311
(#4 NOT USED)
FWD SOLENOID
REVERSE SOLENOID
400V 14AMP
400V 1AMP
TO LIGHTS HARNESS
CRIMP QDF .250 FITTING
TO POSITIVE POST ON ENGINE STARTER
TO NEGATIVE POST ON ENGINE STARTER
Z93217
Battery 31A-950
Z91713
Breakaway Safety Switch
Z56508
CR IntelliFEED Manifold 6gpm
REV A
Approved
DO NOT SCALE DRAWING
©COPYRIGHT PROPERTY OF
EMB MFG, INC.
ST. CLEMENTS, ON
WWW.EMBMFG.COM
PH: (519) 699-2283
SCALE: 1:32 SHT 1 OF 1
PART NO.
Z62108
TITLE: CR100 Wire Harness
MATERIAL: - Rubber
FINISH: Per Sub-Parts
STD. TOLERANCE - UNLESS SPECIFIED, DIMENSIONS ARE IN INCHES
FRACTIONAL ± 1/32
ANGULAR ± 1°
GENERAL PROCESS
DECIMAL PLACE
BENDING
± 0.125
0.00
ONE ± 0.060
± 0.010
0.000
± 0.030
± 0.005
0.0000
± 0.020
± 0.001
0.00000
± 0.010

Hydraulic Hose Parts List

The Chart below is a complete list of hydraulic hoses for all models of the CR100. For information on your model and its hose connections please review the hydraulic schematics on the following pages.

PART NUMBER	DESCRIPTION	QTY	MODEL
Z52121	1/4"Hose, FJIC06 x 90FJIC06 x 28"	2	CR100HW
Z52126	1/4"Hose, FJIC04 x 90FJIC04 x 34"	1	All Models
Z52127	1/4"Hose, FJIC04 x 90FJIC04 x 26"	1	All Models
Z52135	1/4"Hose, FJIC06 x 90FJIC06 x 18"	1	CR100H & CR100HW
Z52136	1/4"Hose, FJIC06 x 90FJIC06 x 23"	1	CR100H & CR100HW
Z52250	3/8"Hose, FJIC08 x 90FJIC08 x 23"	1	All Models
Z52251	3/8"Hose, FJIC08 x 90FJIC08 x 21"	1	CR100H & CR100HW
Z52274	3/8"Hose, FJIC08 x FJIC08 x 88"	1	All Models
Z52275	3/8"Hose, FJIC08 x FJIC08 x 86"	1	All Models
Z52276	3/8"Hose, FJIC08 x FJIC08 x 62"	1	All Models
Z52277	3/8"Hose, FJIC08 x 45FJIC06 x 93"	1	CR100H & CR100HW
Z52278	3/8"Hose, FJIC08 x 45FJIC06 x 27"	1	CR100H & CR100HW
Z52279	3/8"Hose, FJIC08 x 90FJIC08 x 44"	1	CR100H & CR100HW
Z52349	1/2"Hose, FJIC08 x FJIC08 x 16"	1	All Models
Z52351	1/2"Hose, FJIC08 x 90FJIC08 x 42"	1	All Models
Z52423	3/4"Hose, FJIC12 x 90FJIC12 x 20"	1	All Models

Hydraulic Schematic CR100

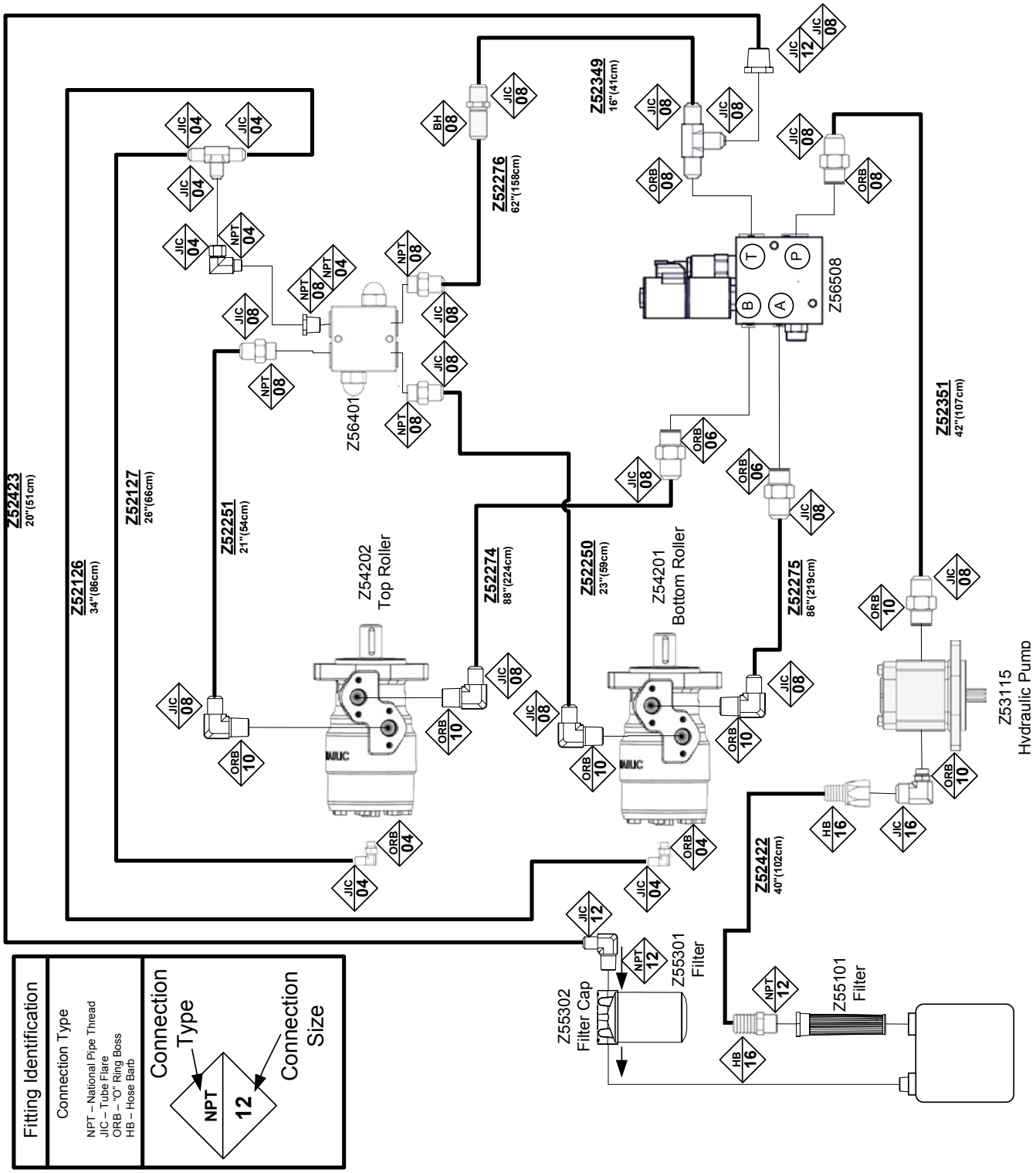

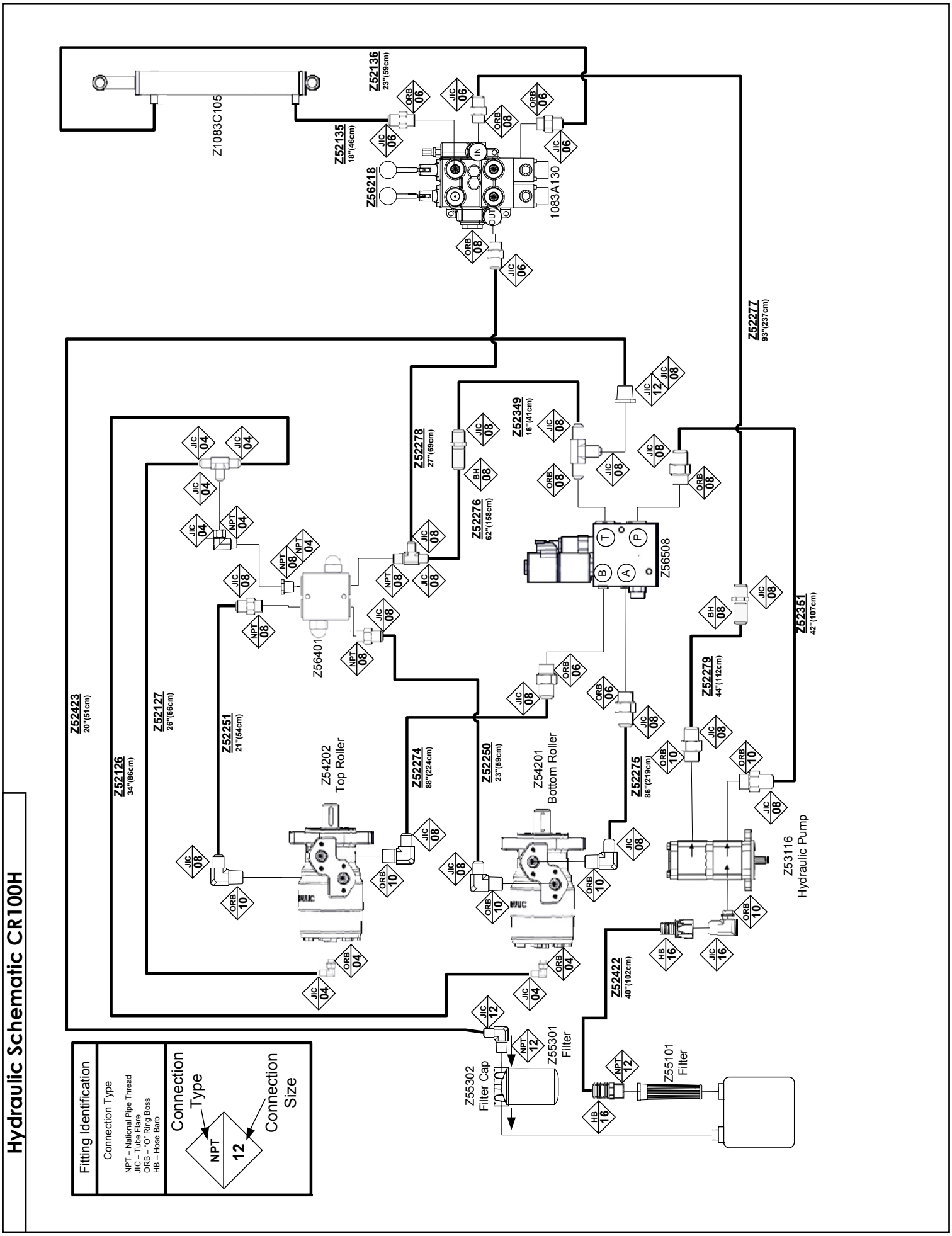
Hydraulic Schematic CR100H
Fitting Identification
Connection Type
NPT – National Pipe Thread
JIC – Tube Flare
ORB – "O" Ring Boss
HB – Hose Barb
Connection Type
NPT
12
Connection Size
Z1083C105
Z52136 23"(59cm)
Z52135 18"(46cm)
Z56218
1083A130
IN
OUT
Z52277 93"(237cm)
Z52423 20"(51cm)
Z52126 34"(86cm)
Z52127 26"(66cm)
Z52251 21"(54cm)
Z52278 27"(69cm)
Z52276 62"(158cm)
Z52349 16"(41cm)
Z56401
Z56508
Z52351 42"(107cm)
Z52279 44"(112cm)
Z52274 88"(224cm)
Z52250 23"(59cm)
Z52275 86"(219cm)
Z54202 Top Roller
Z54201 Bottom Roller
Z53116 Hydraulic Pump
Z52422 40"(102cm)
Z55302 Filter Cap
Z55301 Filter
Z55101 Filter

Hydraulic Schematic CR100HW

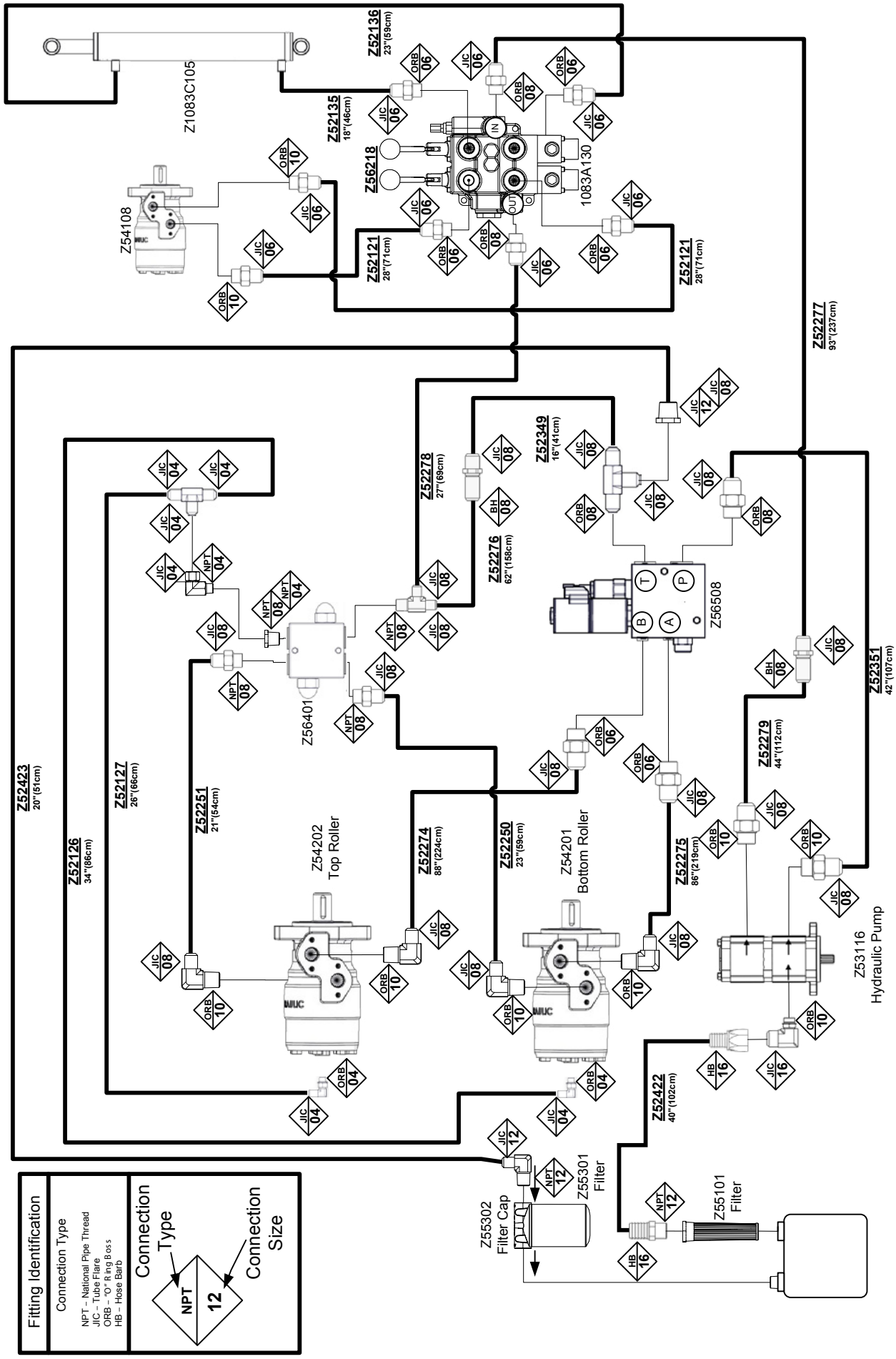

Sheet1

CR100: LABEL PART NUMBER AND DESIGNATION LIST				
Prt. No	Description	CR100	CR100HW	CR100H
Z94622	CR100 TOOLBOX CR100	1	1	1
Z94623	CR100 ENGINE DOOR CR100	1	1	1
Z94115	FIRE HAZARD – NO SMOKING	2	2	2
Z94435	ULSD DEISEL FUEL LABEL	1	1	1
Z94116	DRIVELINE – ARM ENTANGLEMENT HAZARD – KEEP HANDS AWAY	2	2	2
Z94167	HYDRAULIC RUPTURE HAZARD – KEEP BACK	5	8	7
Z94117	FLYING OBJECT HAZARD – KEEP BACK	4	4	4
Z94119	HAZARD – READ MANUAL	1	1	1
Z94228	REMOVE IGNITION KEY	1	1	1
Z94120	ROTATING CUTTER HAZARD – KEEP HANDS AWAY	6	6	6
Z94127	DRIVELINE – HAND ENTANGLEMENT HAZARD – KEEP HANDS AWAY	1	1	1
Z94143	NOISE – 121DB NOISE	1	1	1
Z94207	ENTANGLEMENT HAZARD – DO NOT CLIMB IN HOPPER	4	4	4
Z94209	COUNTER CLOCKWISE ROTATION – ROUND	1	1	1
Z94215	FROZEN BATTERY HAZARD	1	1	1
Z94414	ROLLER FEED CHIPPER – FEED CONTROL RH	1	1	1
Z94422	FEED CONTROL LOCK	1	1	1
Z94238	150 MM (6.0) MAX MATERIAL CAUTION DECAL	2	2	2
Z94203	PROTECTION EQUIPMENT	2	2	2
Z94119	ROLLER FEED CHIPPER – FEED CONTROL LH	1	1	1
Z94421	ROTOR LOCK	1	1	1
Z94618	CR100 L&R CHUTE MID. WALLENSTEIN	2	2	2
Z94619	CR100 CONTROL PANEL WALLENSTEIN	1	1	1
Z94620	CR100 TABLE BOTTOM WALLENSTEIN	1	1	1
Z94621	CR100 INTELLIFEED	1	1	1
Z94416	CR100 STARTING / OPERATING / STOPPING INSTRUCTIONS	1	1	1
Z94625	CR100 CHUTE RIGHT BOTTOM GOLD	1	1	1
	Z94617 MADE IN CANADA 3" DIA" ON Z94625	1	1	1
	Z94630 3 YEAR WARRANTY DECAL ON Z94625	1	1	1
Z94627	CR100 CHUTE LEFT BOTTOM GOLD	1	1	1
	Z94617 MADE IN CANADA 3" DIA" ON Z94627	1	1	1
	Z94630 3 YEAR WARRANTY DECAL ON Z94627	1	1	1
	Z94426 GREASE 50HRS LABEL ON Z94627	1	1	1
Z94626	CR100 CHUTE RIGHT ELBOW SILVER	1	1	1
Z94628	CR100 CHUTE LEFT ELBOW SILVER	1	1	1
Z96376	CR MARKETING STICKER 7.0 X 1.5	1	1	1
Z96377	CR MARKETING STICKER 13.0 X 2.5	1	1	1
Z94426	GREASE 50HRS LABEL	7	7	7
Z94144	RH ROTATION DECAL	1	1	2
Z94145	LH ROTATION DECAL	1	1	2
Z94436	ANTIFREEZE LABEL	1	1	1
Z94124	DECAL WARNING LABEL	2	2	2
Z94401	WINCH CONTROL – WIND/UNWIND	0	1	0
Z94402	WINCH – FREE WHEEL / ENGAGED	0	2	0
Z94250	WINCH ENTANGLEMENT DECAL HORIZONTAL	0	1	0
Z944243	WINCH ENTANGLEMENT DECAL	0	1	0
Z94415	UPPER ROLLER LIFT CYLINDER – LIFT / CRUSH	0	0	1

Label Layout - Left Side

REMEMBER - If safety signs have been damaged, removed, become illegible or parts replaced without safety signs, new signs must be applied. New safety signs are available from your authorized dealer.

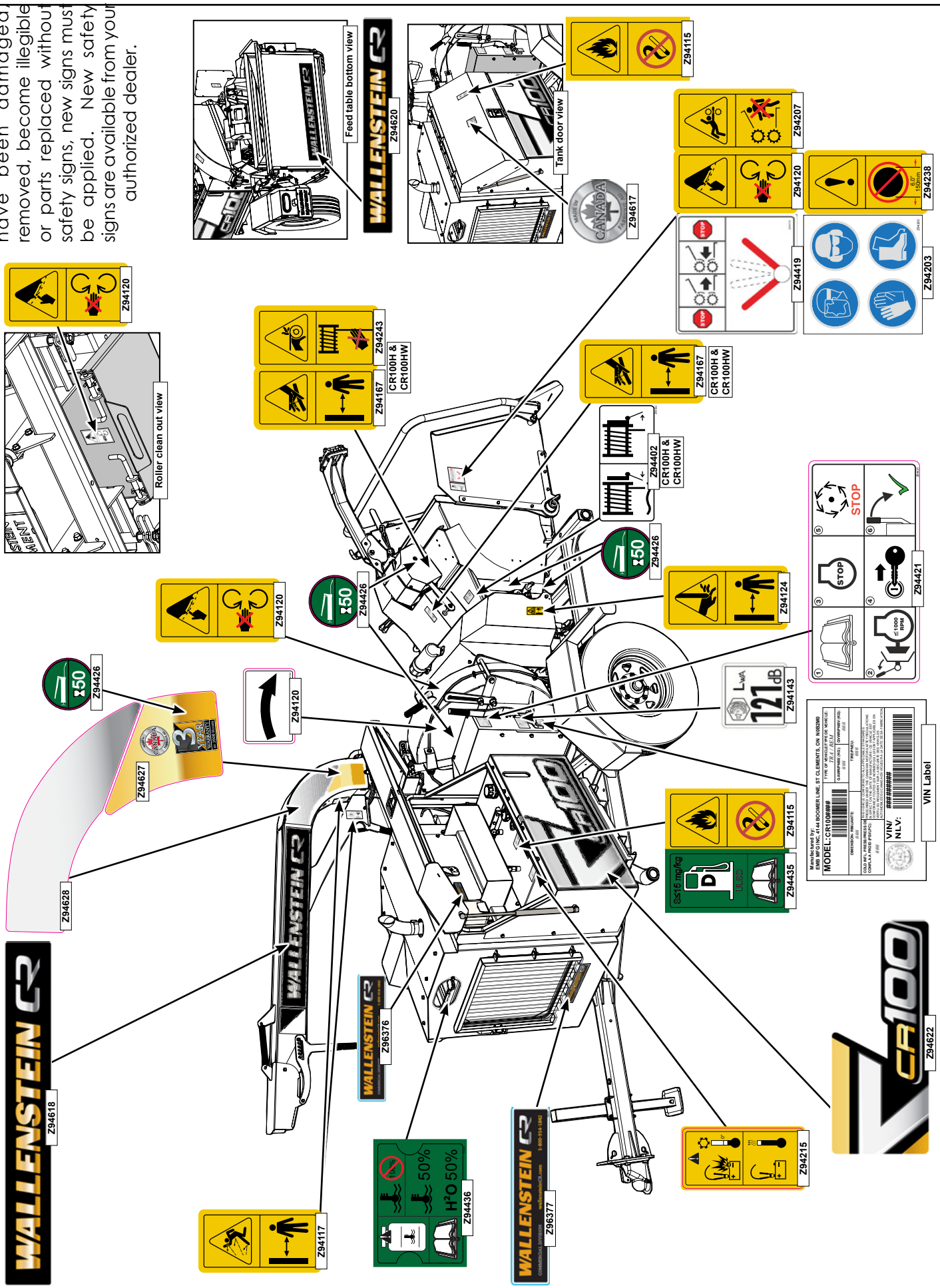

Label Layout - Right Side

REMEMBER - If safety signs have been damaged, removed, become illegible or parts replaced without safety signs, new signs must be applied. New safety signs are available from your authorized dealer.

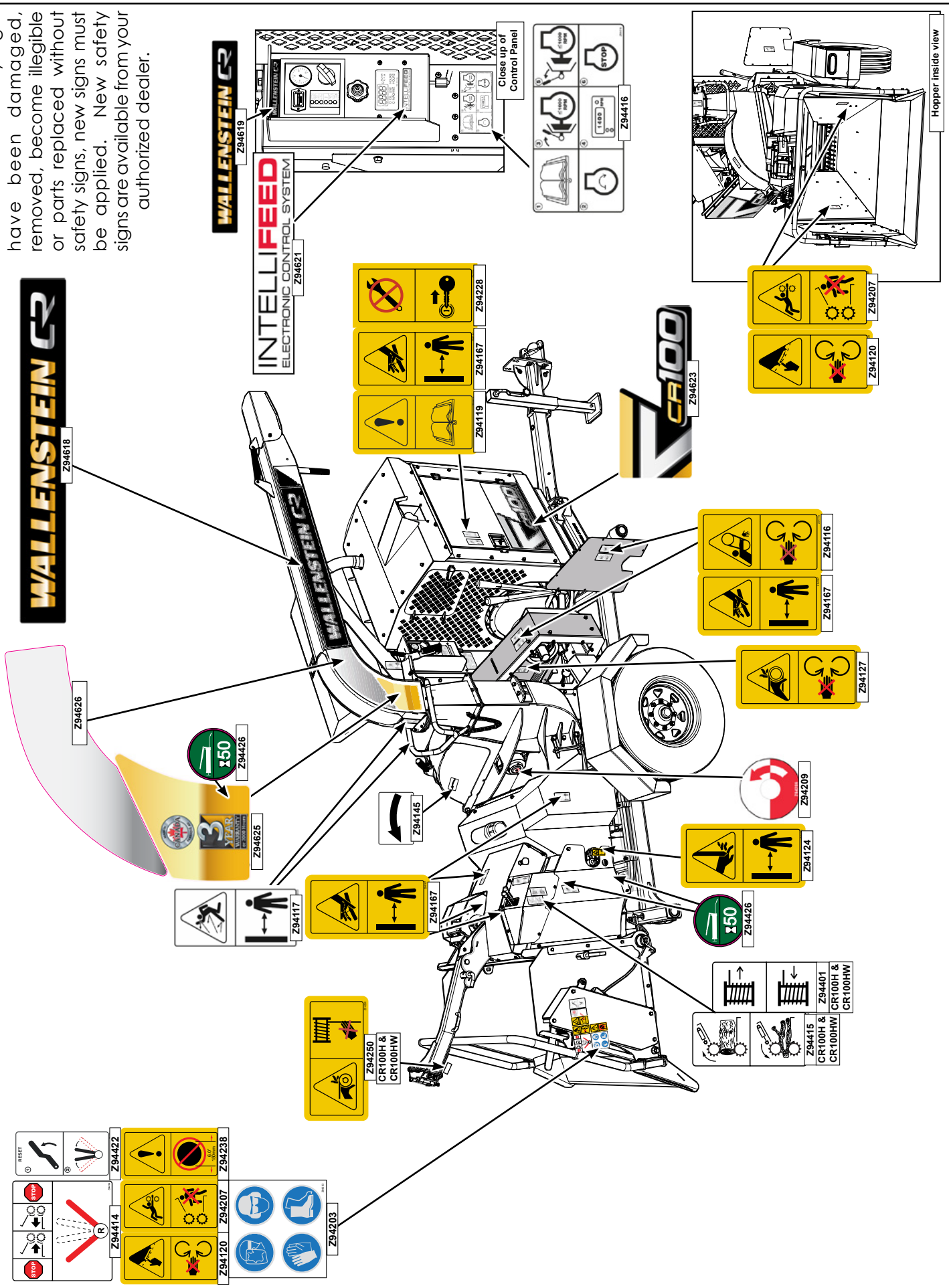

Accessories

#1012L269

#1012L269 LEDGER CLEARANCE SETTING GAUGE

For **CR100 Series**
An easy and accurate way of setting the critical clearances between the ledger blade and the rotor chipper blade.

WALLENSTEIN CR

EMB Manufacturing Inc.
4144 Boomer Line • St. Clements, On • N0B 2M0 • Canada
Ph: 1-800-914-1842 • Fax: (519) 699-4146
www.wallensteincr.ca

CR100 / CR100P COMMERCIAL TRAILER WOOD CHIPPER OPERATOR'S MANUAL

Before putting the CR100 into service:
Do not attempt to start or operate the chipper without recieving full safety training and instruction in its features, operation and maintenance. See page 5 for Pre-Delivery Procedure.

Keep this manual with the CR100 at all times

PRINTED IN CANADA
REV 071112
PART NUMBER: Z97068

#Z97068 CR100 / CR100P COMMERCIAL TRAILER WOOD CHIPPER OPERATOR'S MANUAL

Available as a download at www.wallensteincr.com